8. 3 级维修

8-1.框图

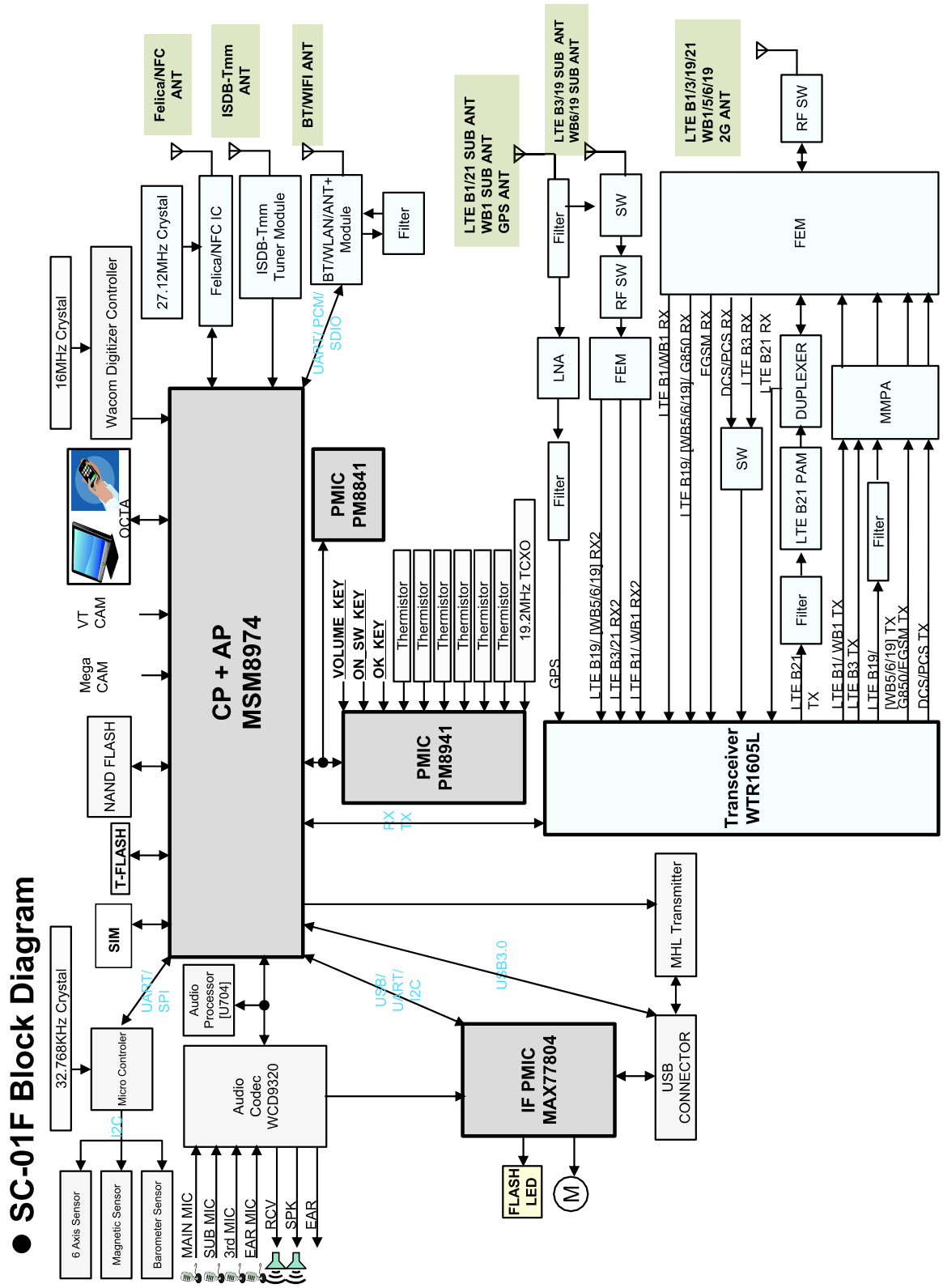

保密和所有权-本维修手册内容的变更恕不另行通知。
未经三星书面授权而发布，传送，或违背本文件中的任何内容或数据是严格禁止的。

8-2.主板图

8-2-1.主板顶部

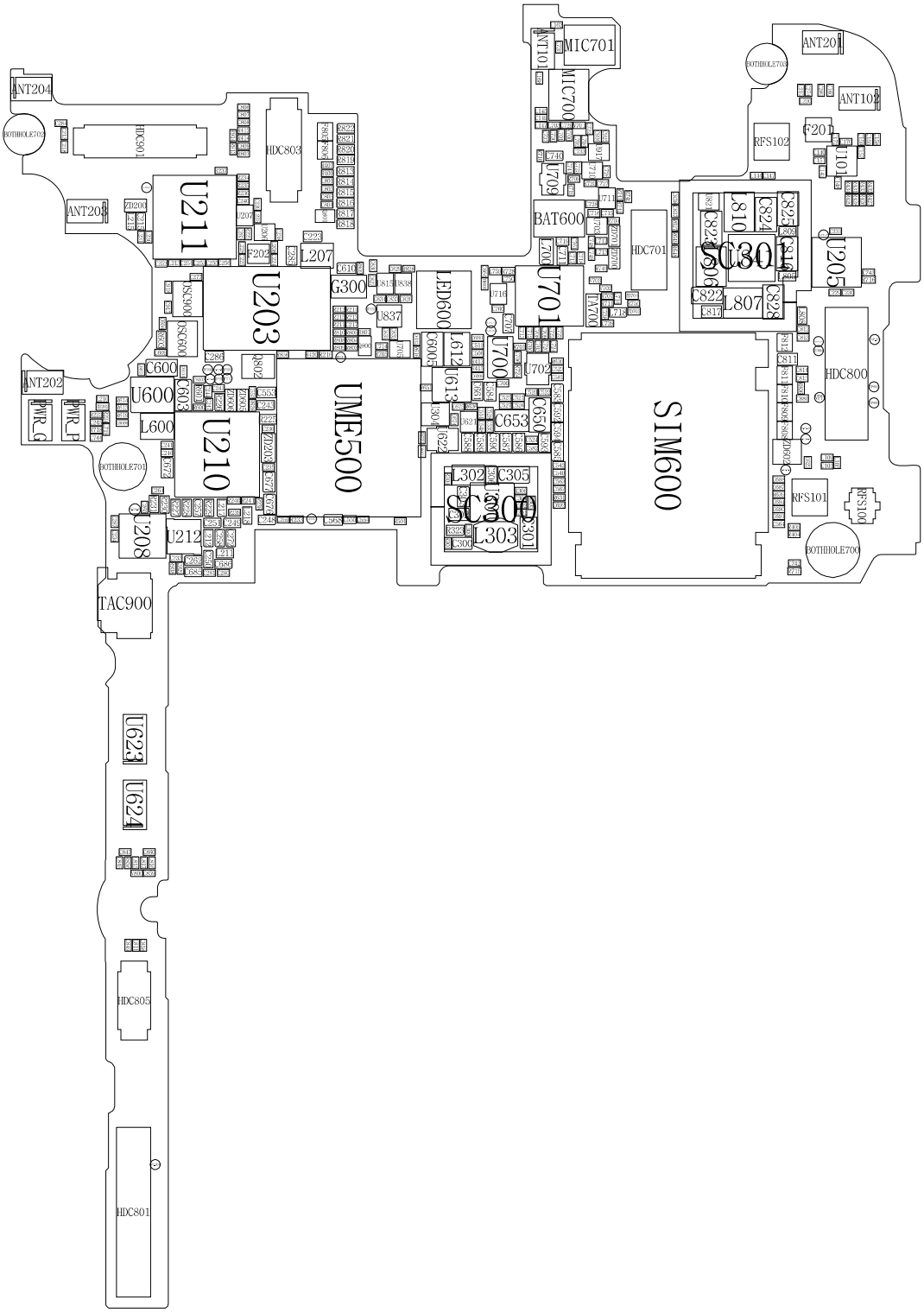

保密和所有权-本维修手册内容的变更恕不另行通知。
未经三星书面授权而发布，传送，或违背本文件中的任何内容或数据是严格禁止的。

8-2-2.底部

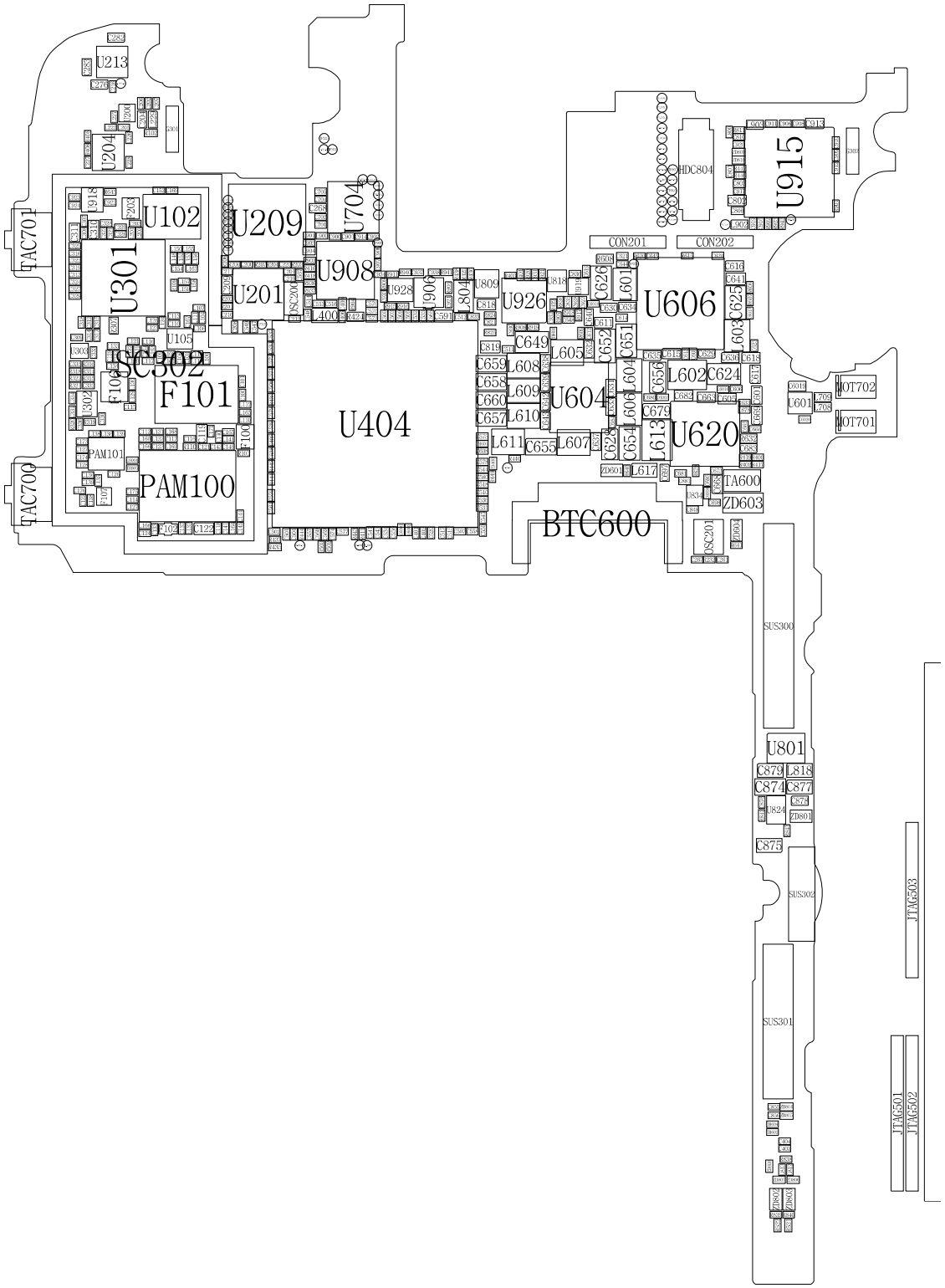

保密和所有权-本维修手册内容的变更恕不另行通知。
未经三星书面授权而发布，传送，或违背本文件中的任何内容或数据是严格禁止的。

8-2-3.副板顶部

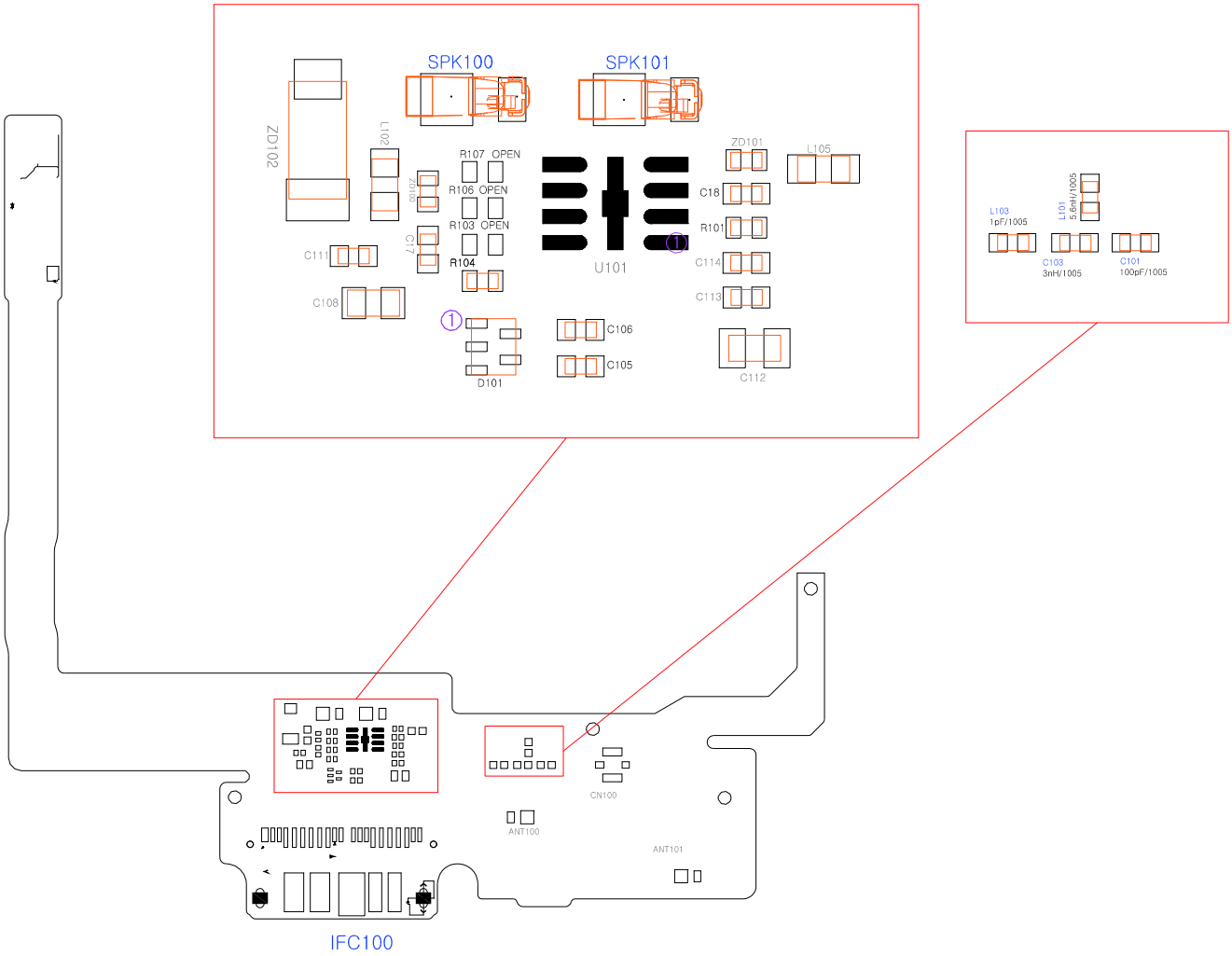

保密和所有权-本维修手册内容的变更恕不另行通知。
未经三星书面授权而发布，传送，或违背本文件中的任何内容或数据是严格禁止的。

8-2-4.副板底部

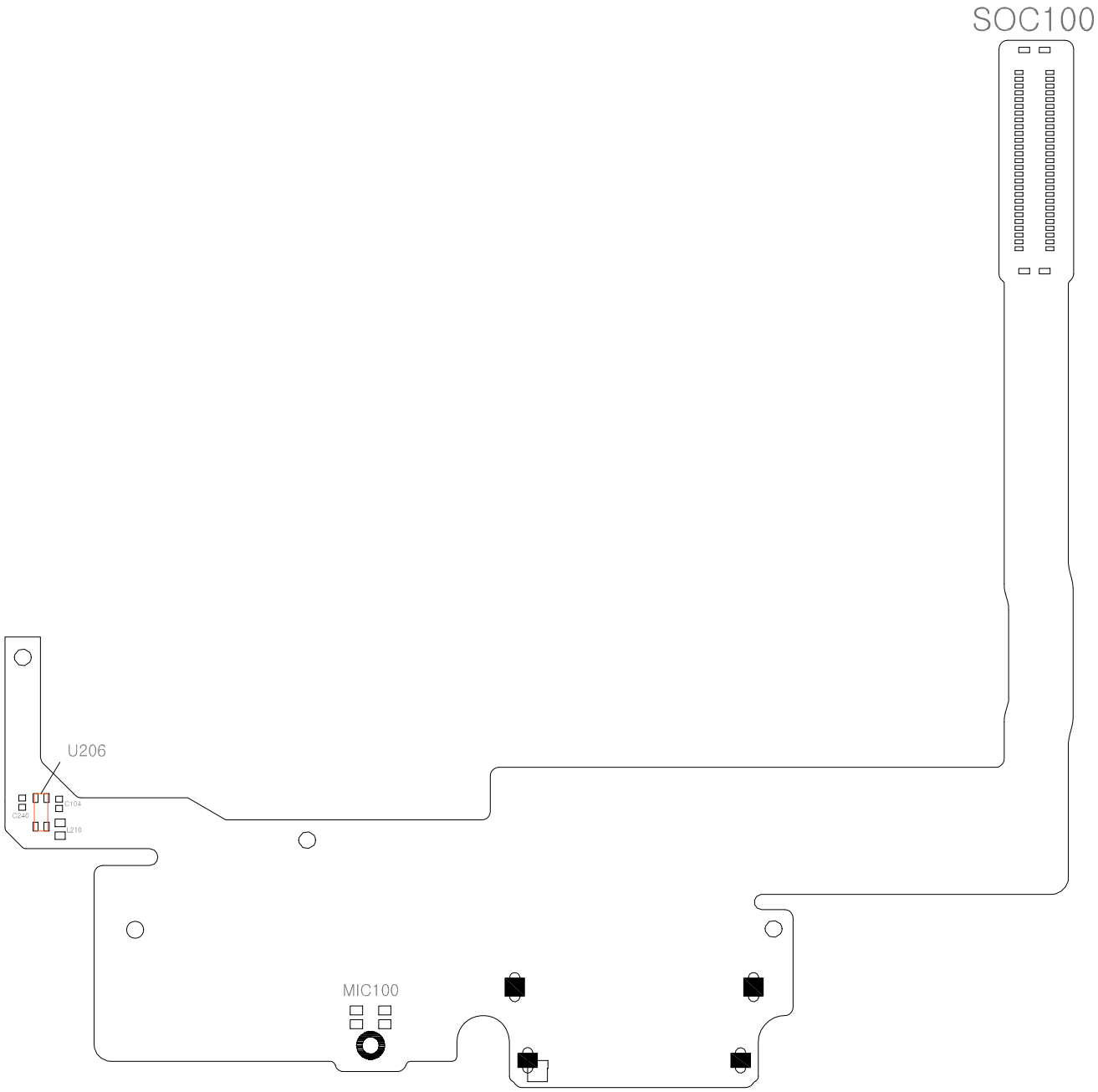

保密和所有权-本维修手册内容的变更恕不另行通知。
未经三星书面授权而发布，传送，或违背本文件中的任何内容或数据是严格禁止的。

8-3.故障排除流程图

设备

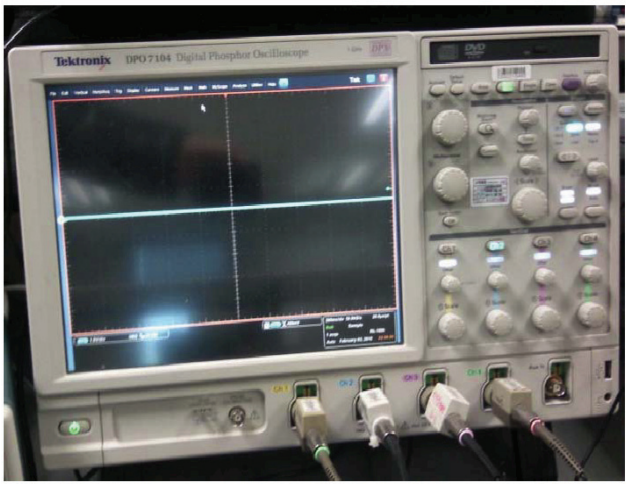

↑示波器

↑数字万用表

↑电源供电器

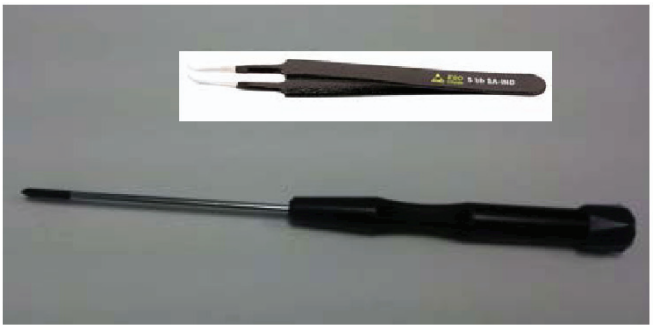

↑+字螺丝刀，ESD 安全镊子

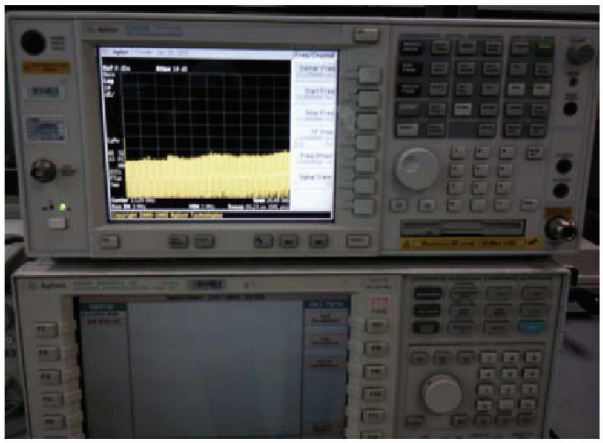

↑8960 和光谱分析器

↑焊接熨斗

保密和所有权-本维修手册内容的变更恕不另行通知。
未经三星书面授权而发布，传送，或违背本文件中的任何内容或数据是严格禁止的。

8-3-1.开机

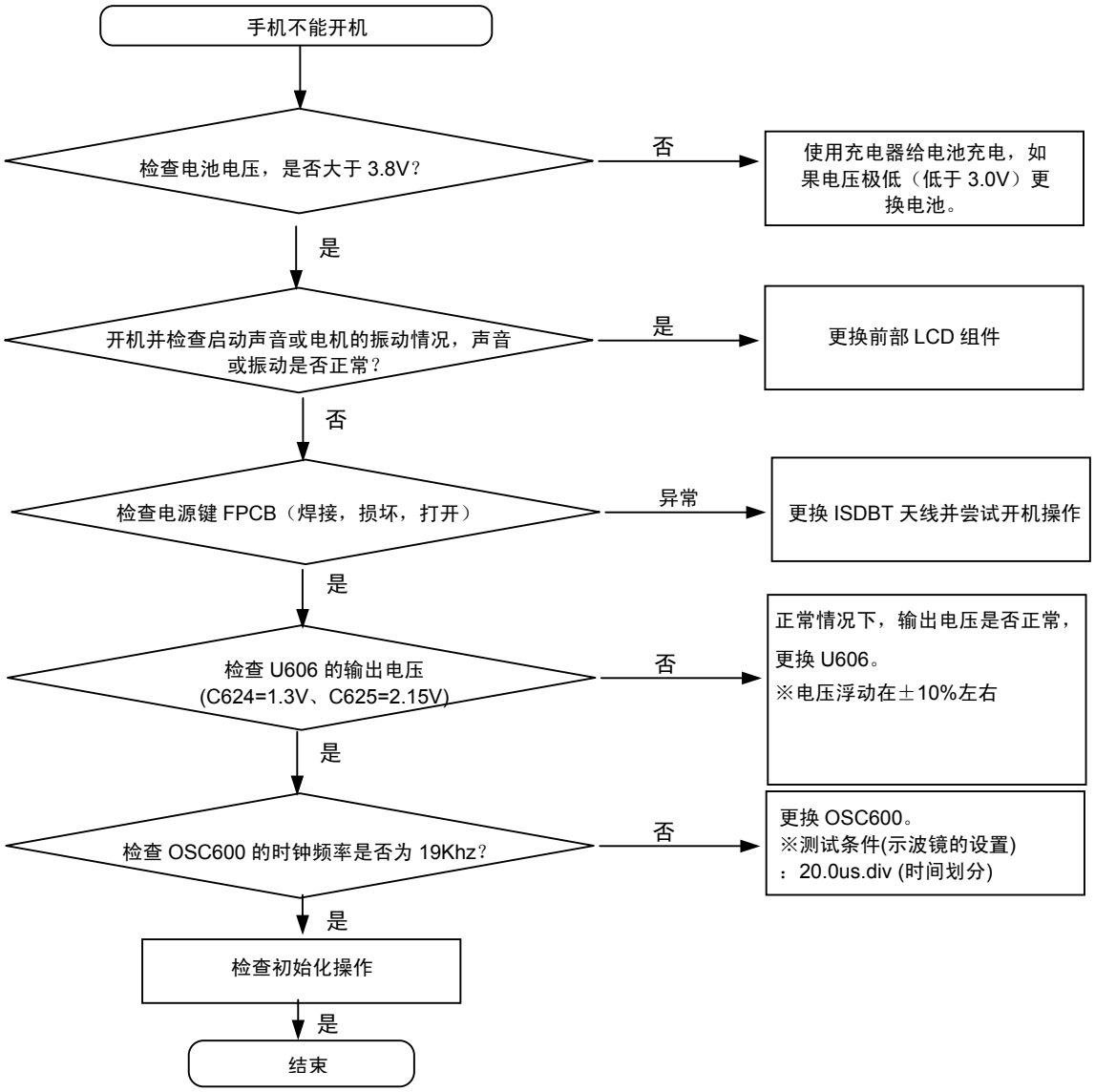

保密和所有权-本维修手册内容的变更恕不另行通知。
未经三星书面授权而发布，传送，或违背本文件中的任何内容或数据是严格禁止的。

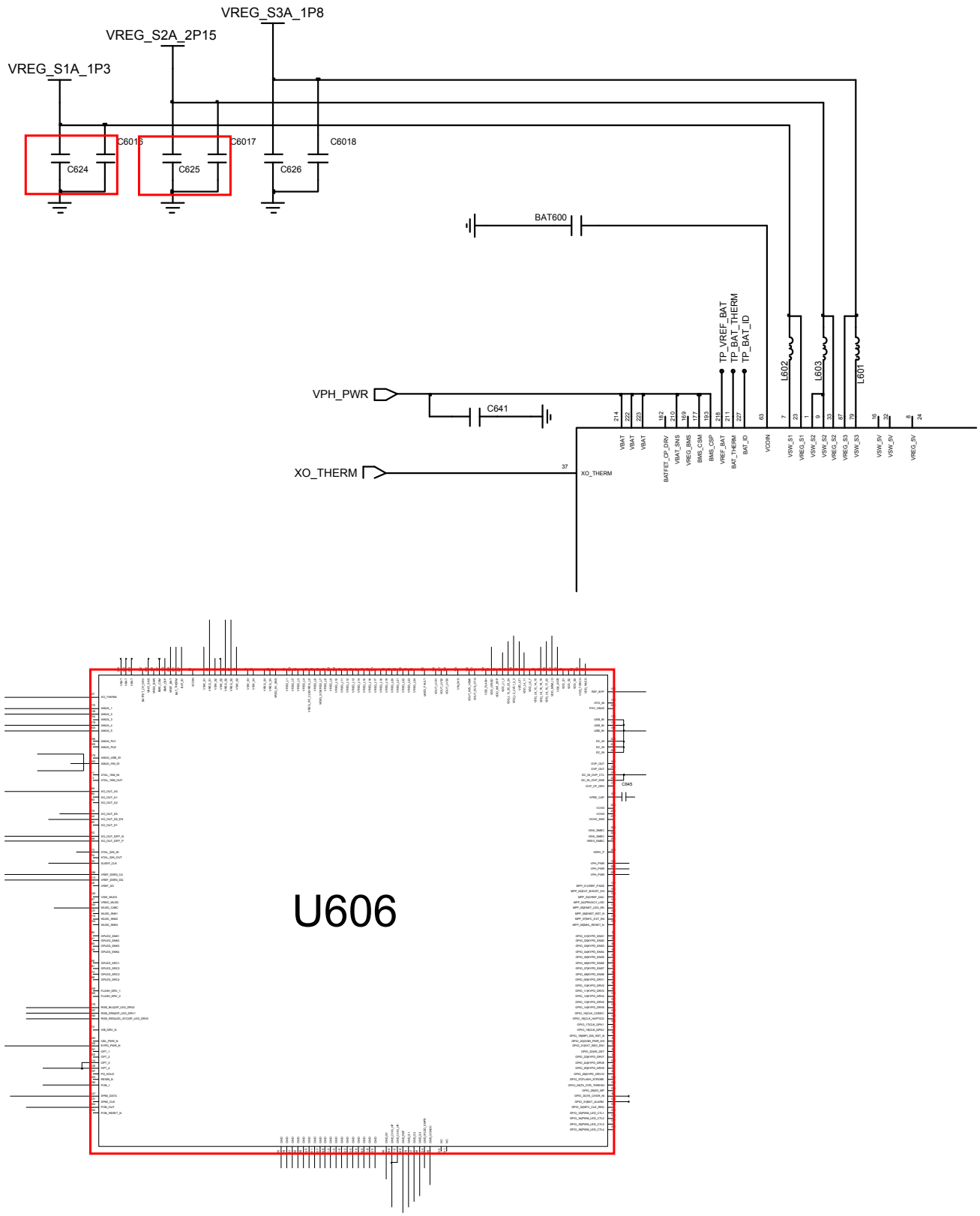

Confidential and proprietary-the contents in this service guide subject to change without prior notice.
Distribution, transmission, or infringement of any content or data from this document without Samsung's written authorization is strictly prohibited.

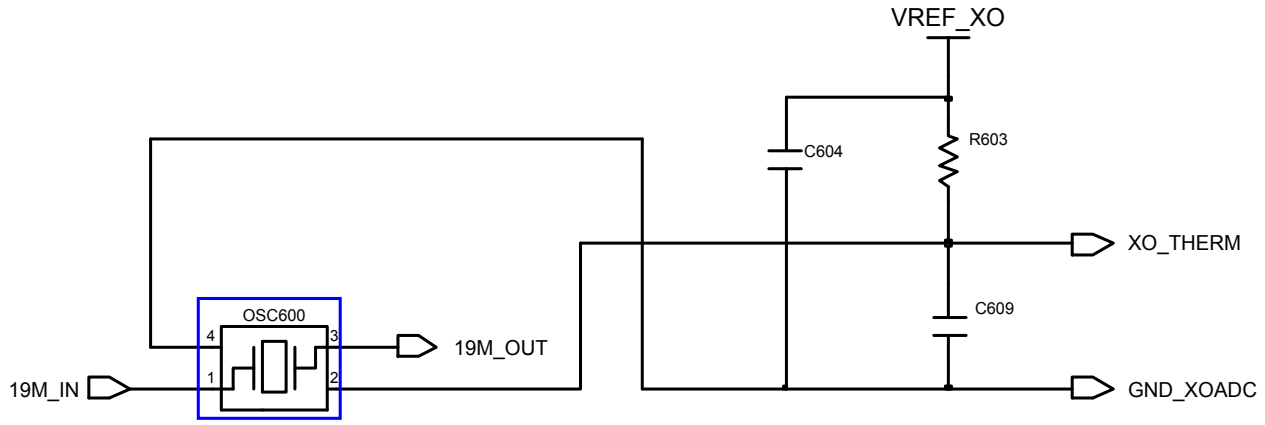

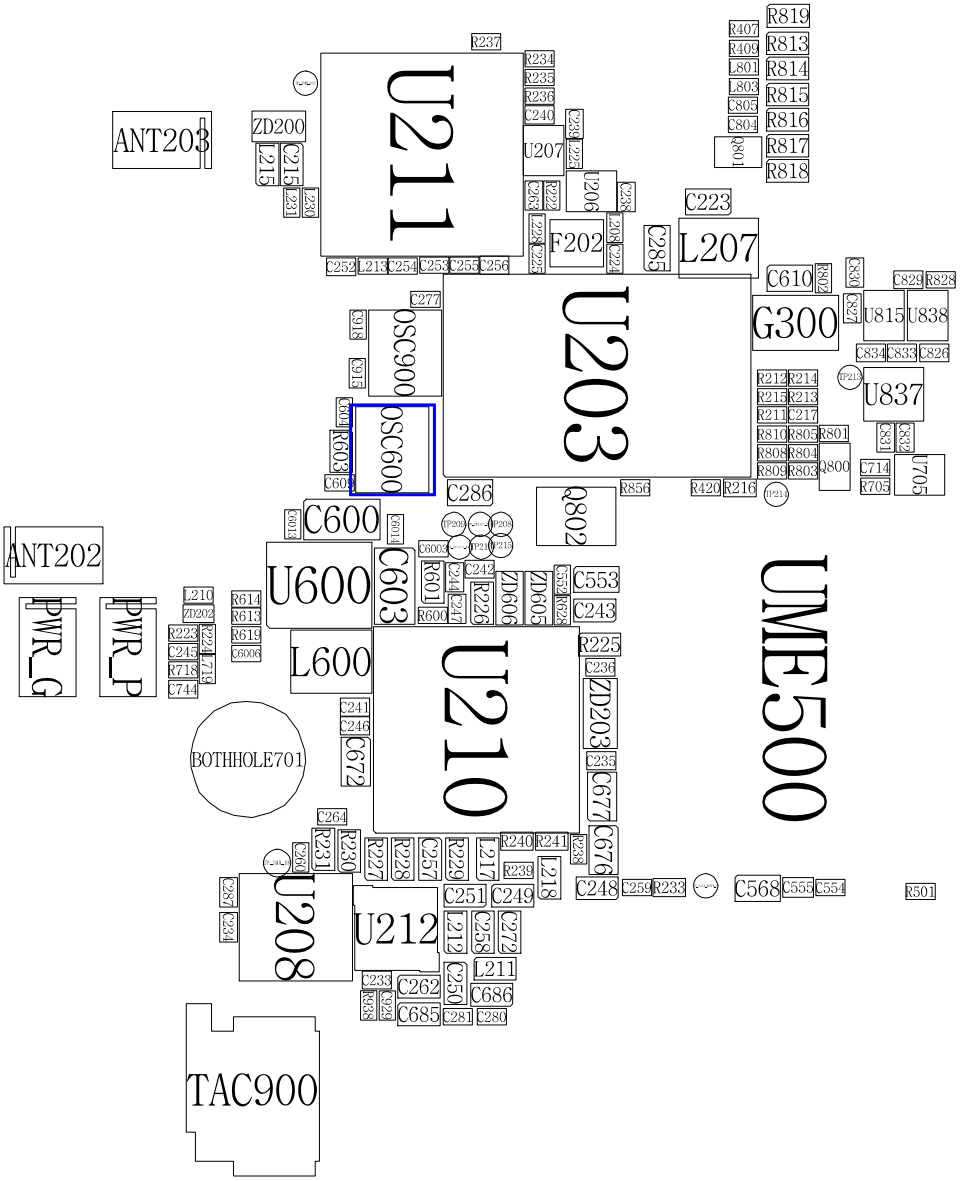

Confidential and proprietary-the contents in this service guide subject to change without prior notice.
Distribution, transmission, or infringement of any content or data from this document without Samsung's written authorization is strictly prohibited.

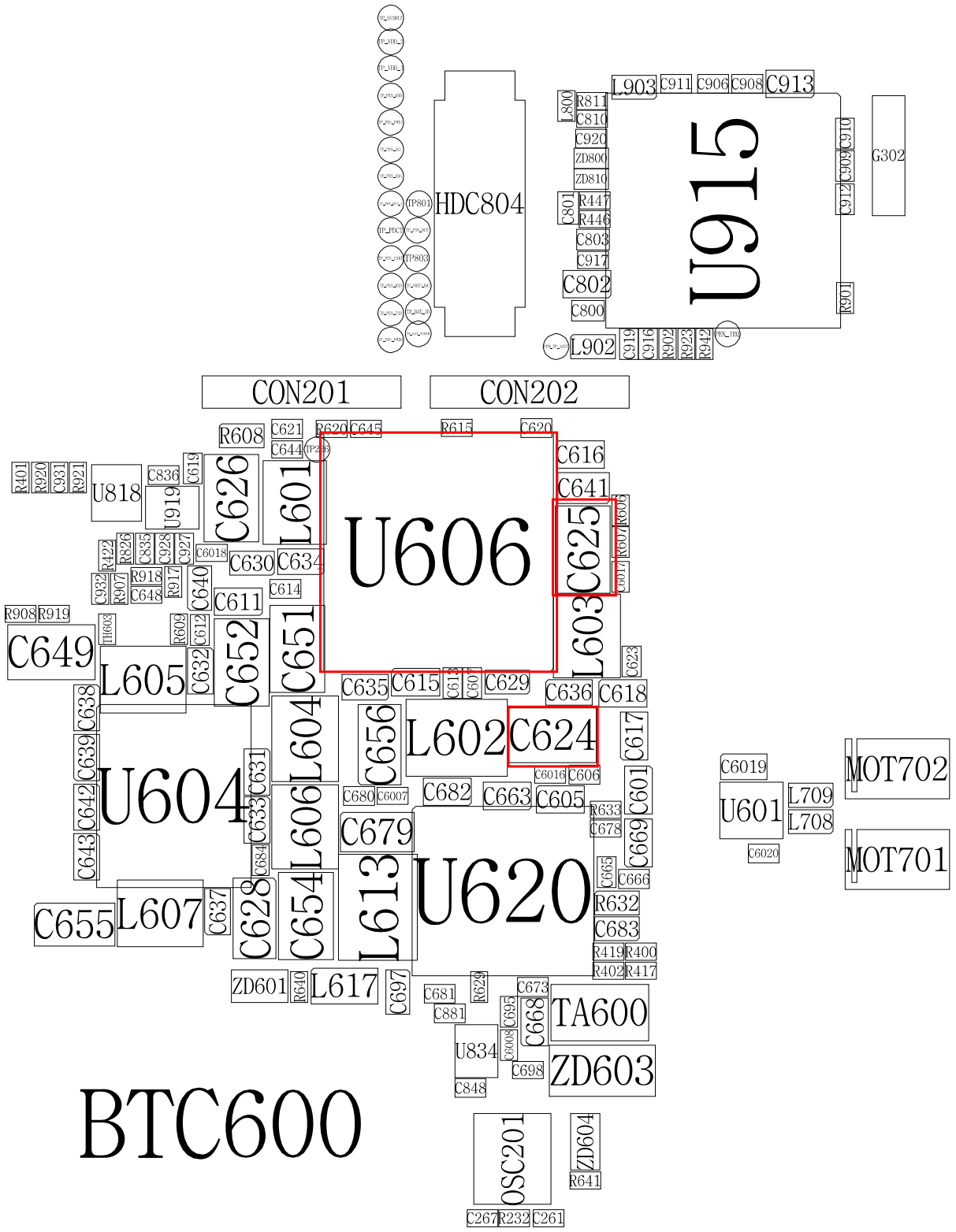

Confidential and proprietary-the contents in this service guide subject to change without prior notice.
Distribution, transmission, or infringement of any content or data from this document without Samsung's written authorization is strictly prohibited.

8-3-2. 初始化

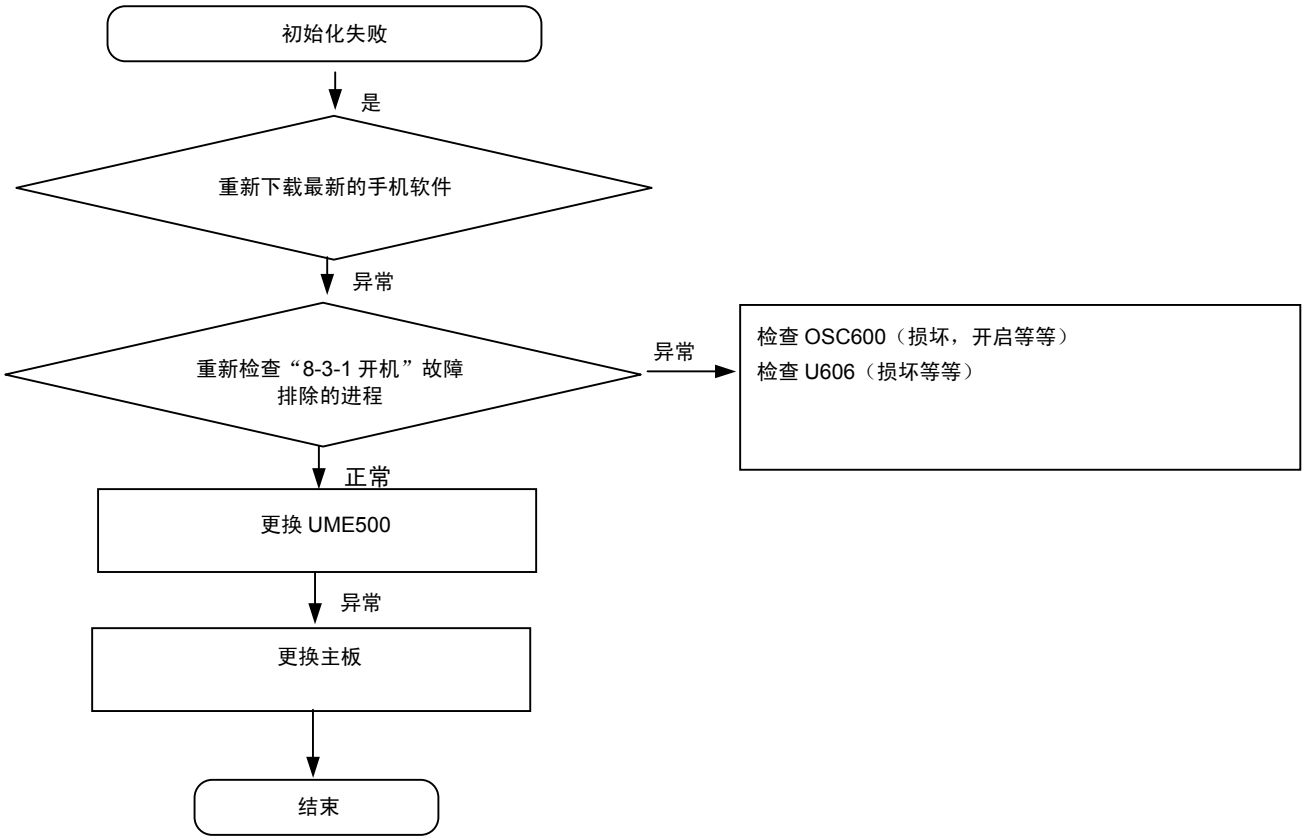

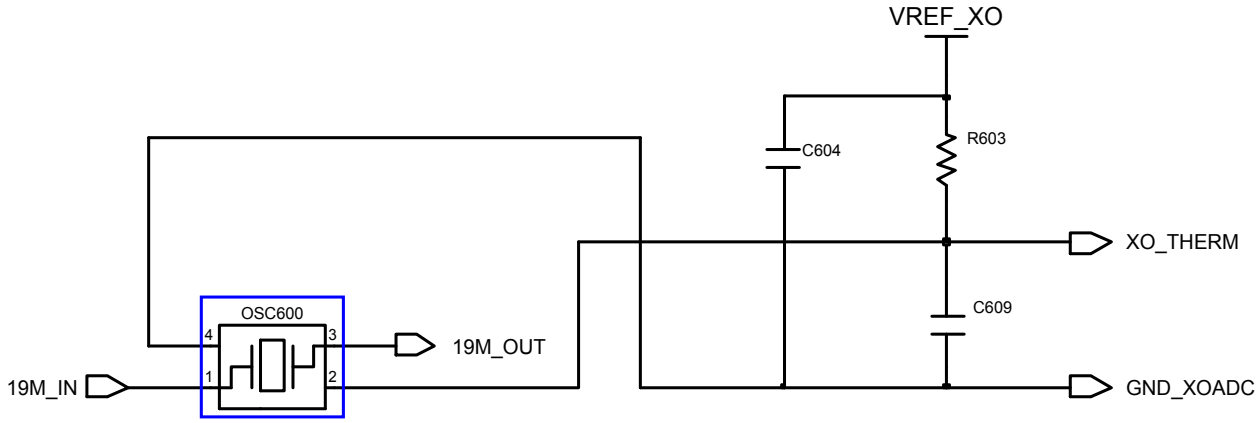

保密和所有权-本维修手册内容的变更恕不另行通知。
未经三星书面授权而发布，传送，或违背本文件中的任何内容或数据是严格禁止的。

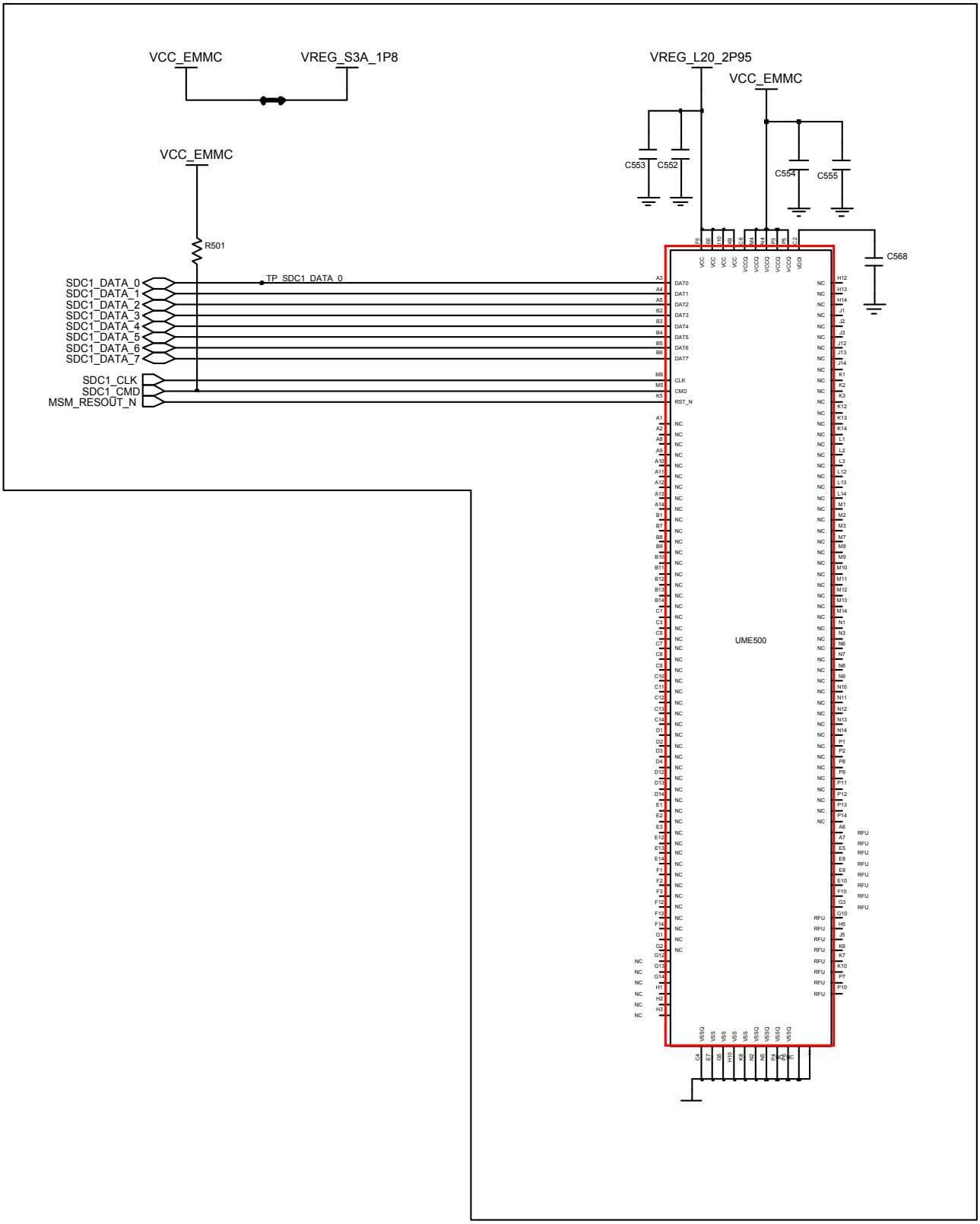

Confidential and proprietary-the contents in this service guide subject to change without prior notice.
Distribution, transmission, or infringement of any content or data from this document without Samsung's written authorization is strictly prohibited.

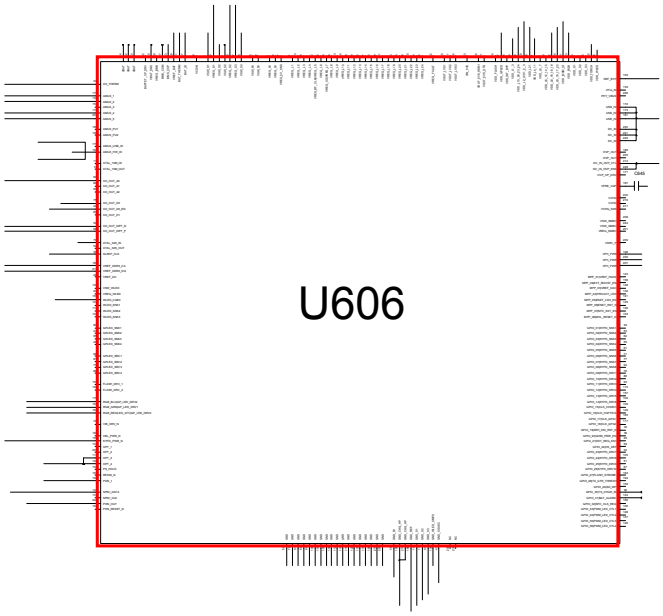

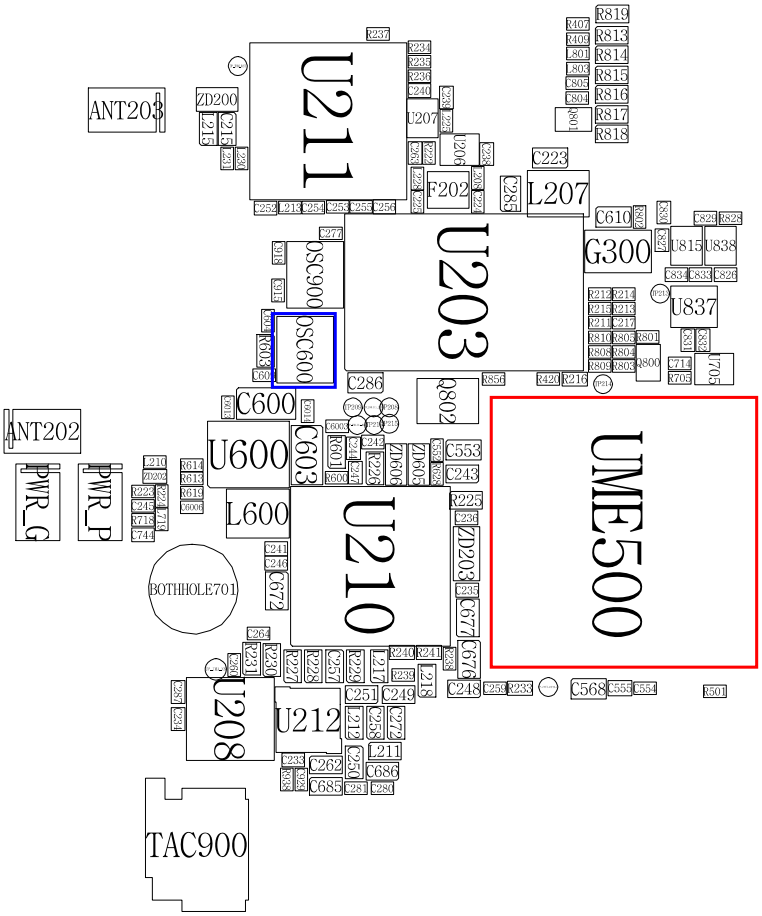

Confidential and proprietary-the contents in this service guide subject to change without prior notice.
Distribution, transmission, or infringement of any content or data from this document without Samsung's written authorization is strictly prohibited.

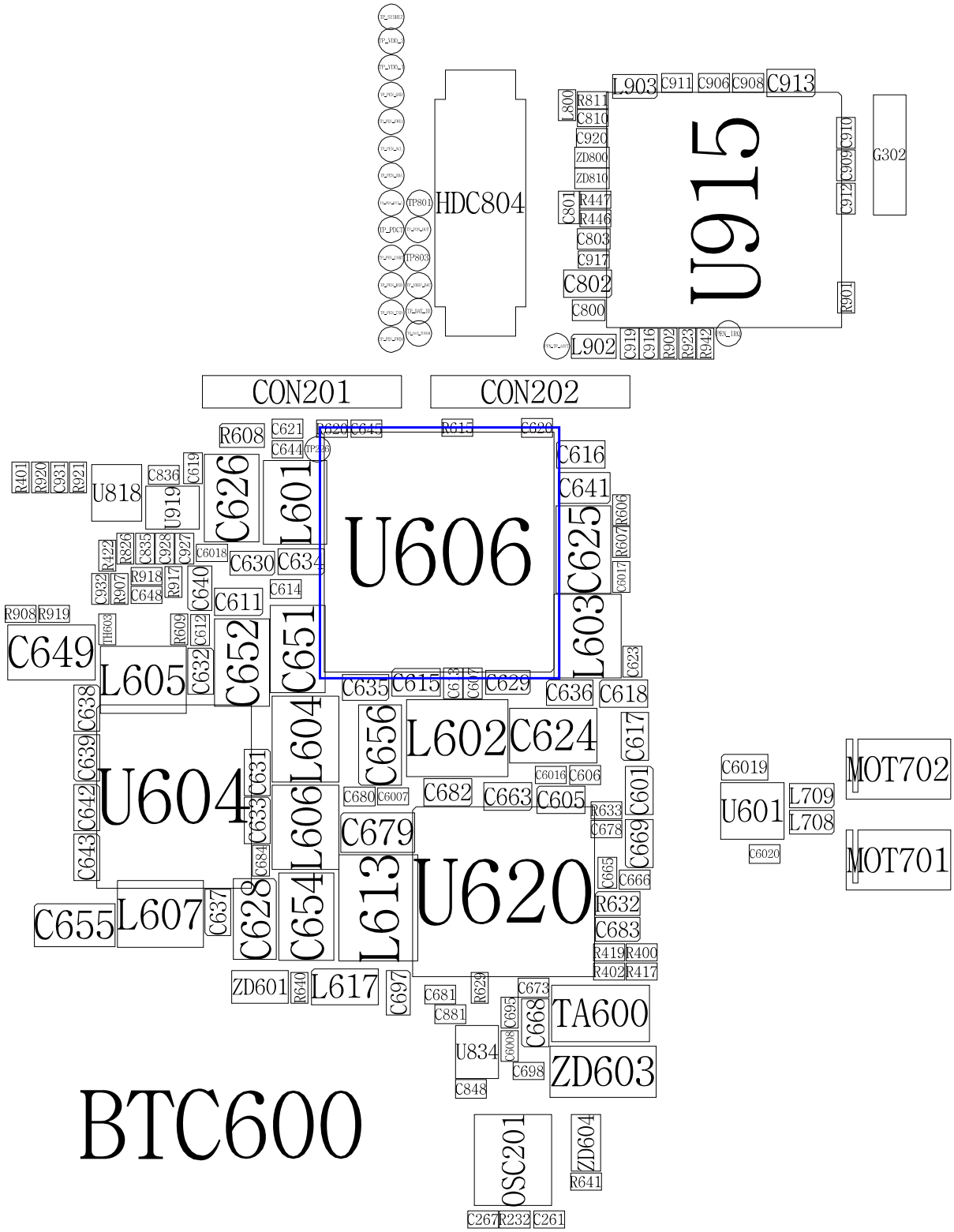

Confidential and proprietary-the contents in this service guide subject to change without prior notice.
Distribution, transmission, or infringement of any content or data from this document without Samsung's written authorization is strictly prohibited.

8-3-3.无服务

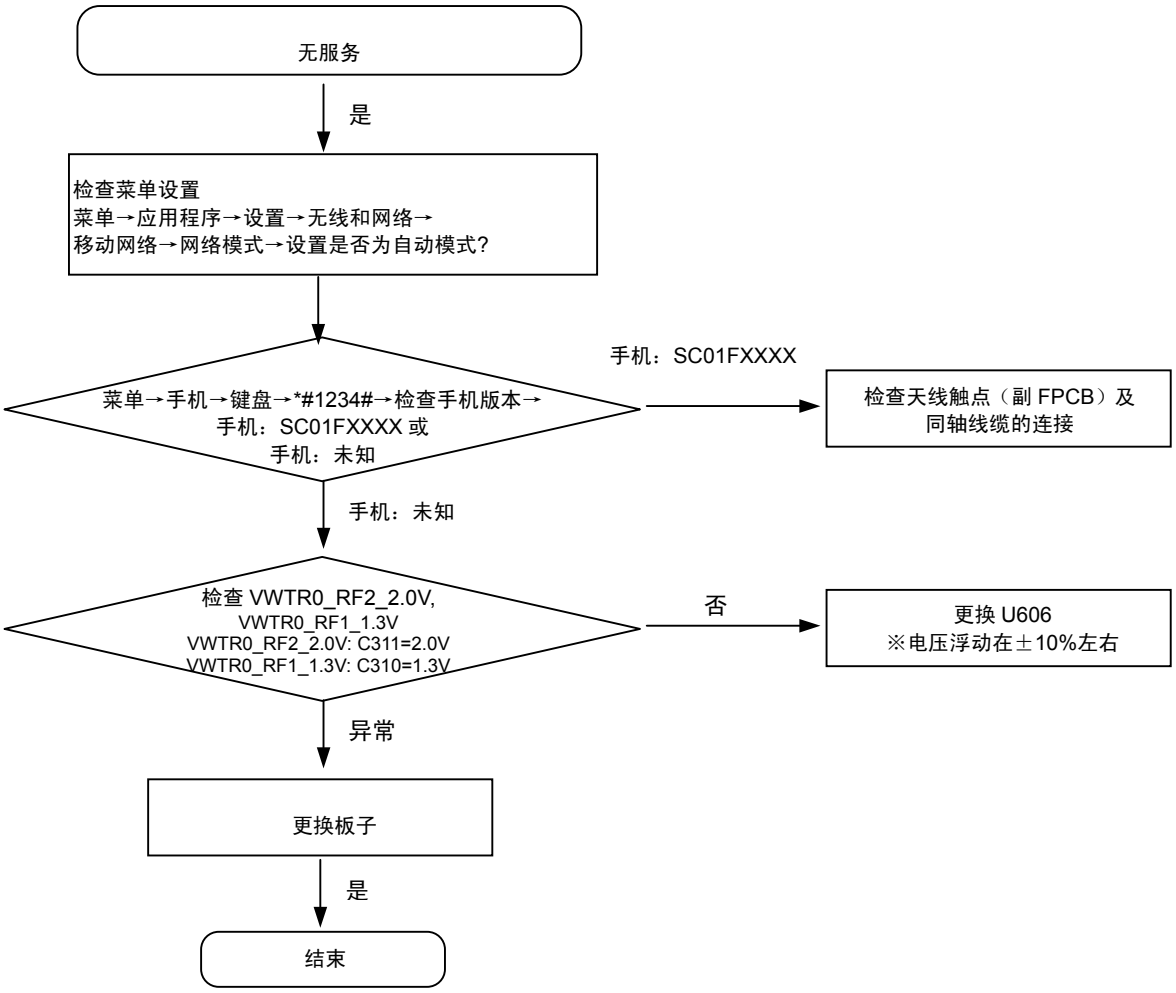

保密和所有权-本维修手册内容的变更恕不另行通知。
未经三星书面授权而发布，传送，或违背本文件中的任何内容或数据是严格禁止的。

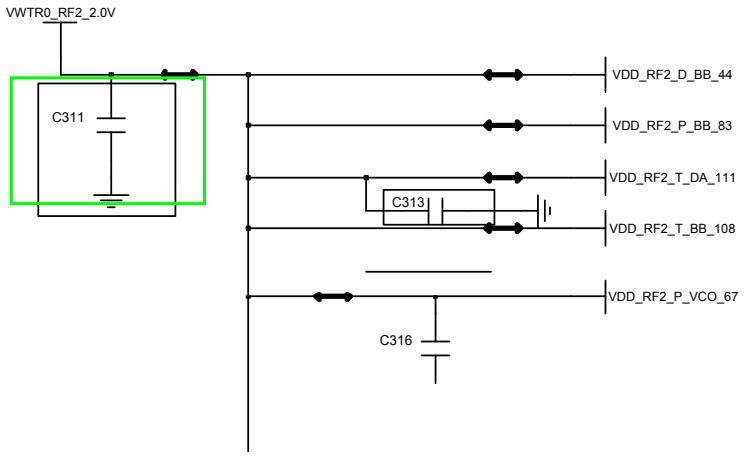

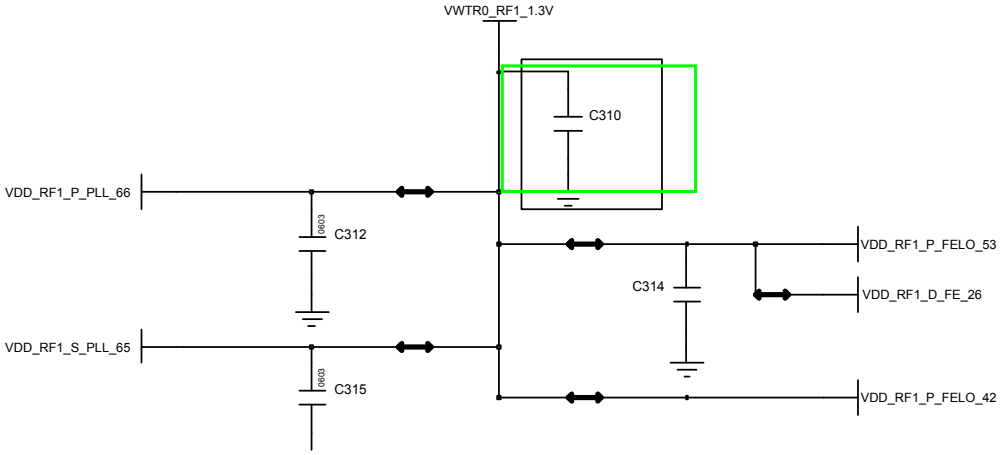

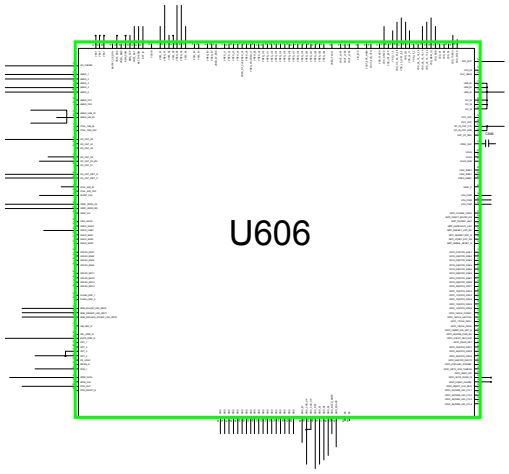

Confidential and proprietary-the contents in this service guide subject to change without prior notice.
Distribution, transmission, or infringement of any content or data from this document without Samsung's written authorization is strictly prohibited.

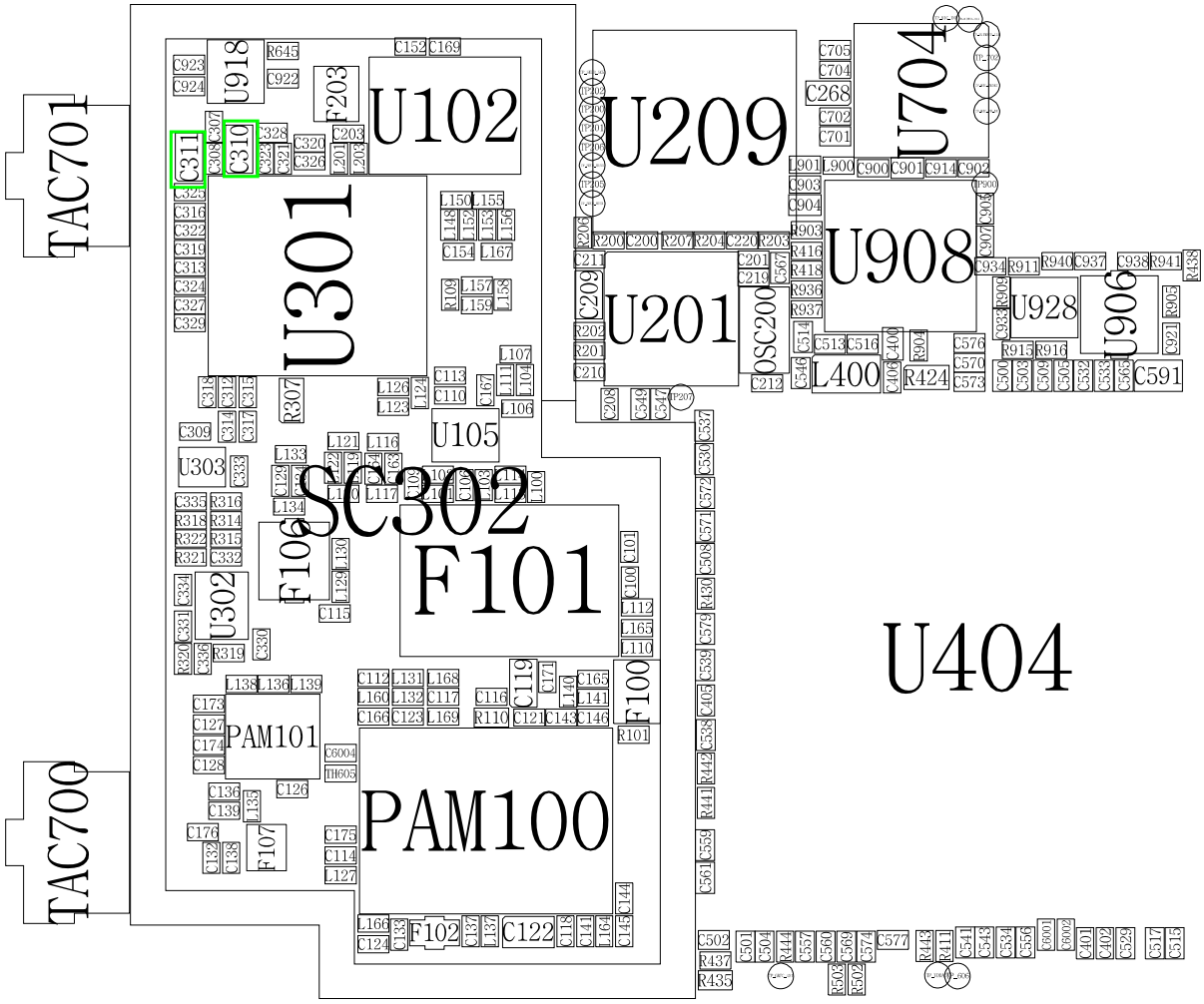

保密和所有权-本维修手册内容的变更恕不另行通知。
未经三星书面授权而发布，传送，或违背本文件中的任何内容或数据是严格禁止的。

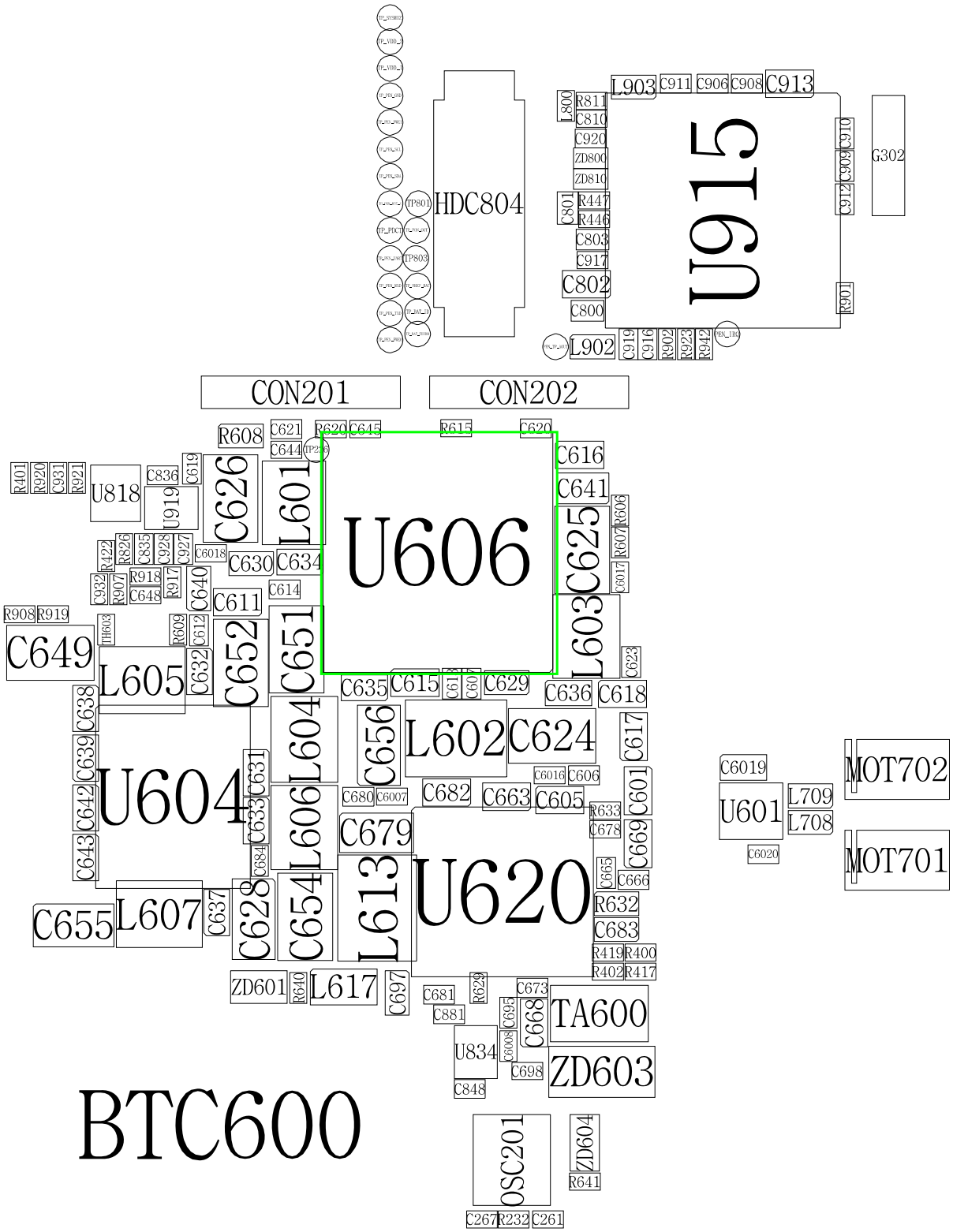

保密和所有权-本维修手册内容的变更恕不另行通知。
未经三星书面授权而发布，传送，或违背本文件中的任何内容或数据是严格禁止的。

8-3-4.Sim 卡

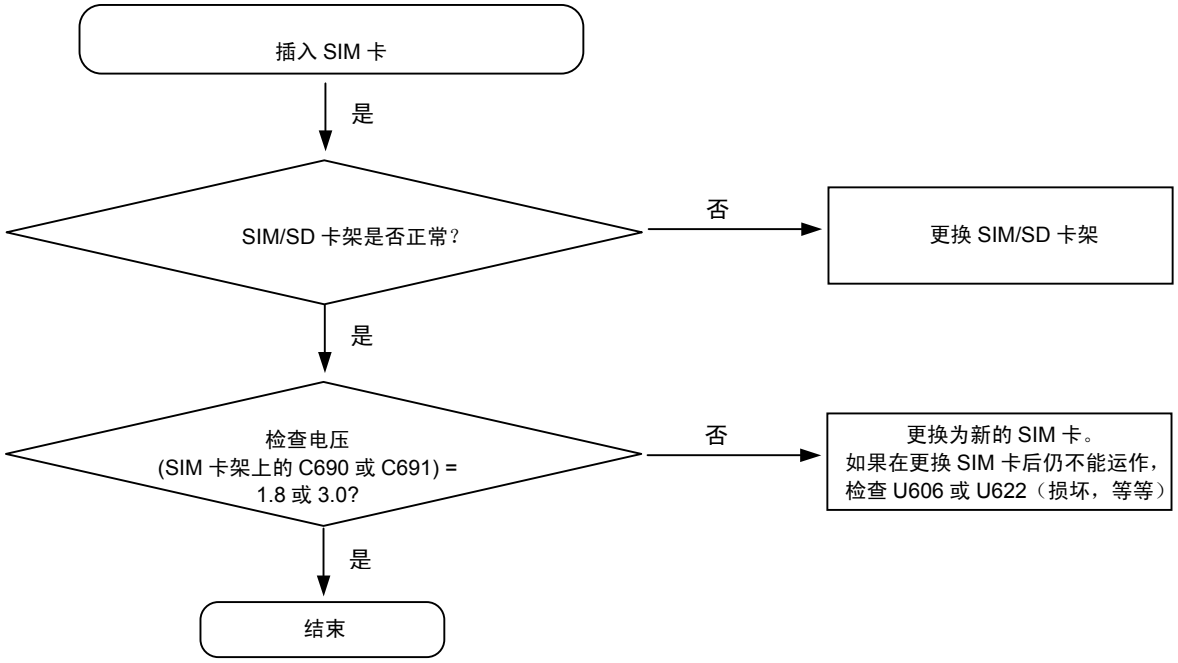

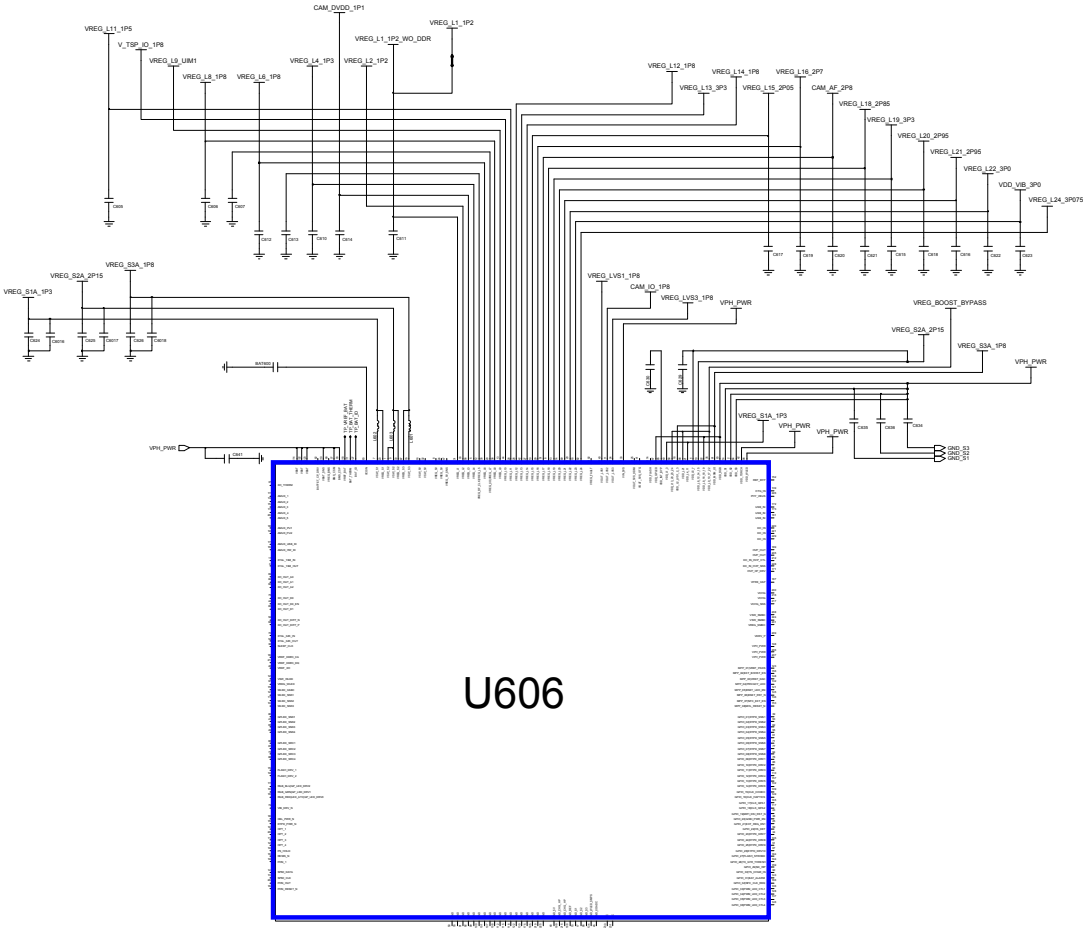

保密和所有权-本维修手册内容的变更恕不另行通知。
未经三星书面授权而发布，传送，或违背本文件中的任何内容或数据是严格禁止的。

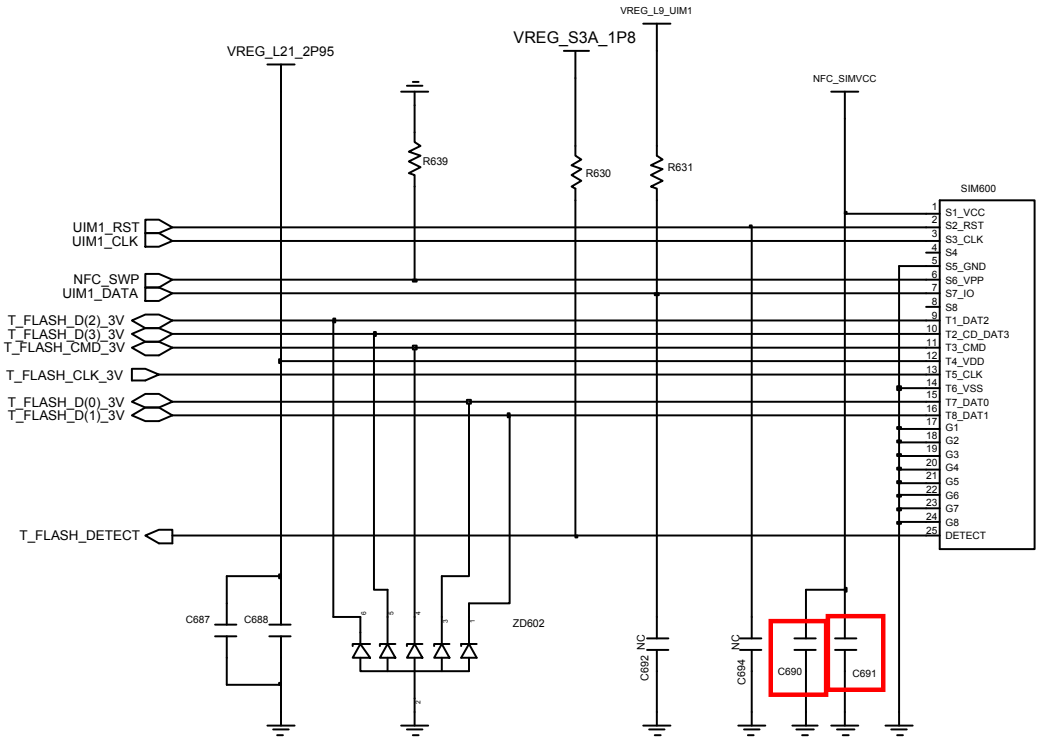

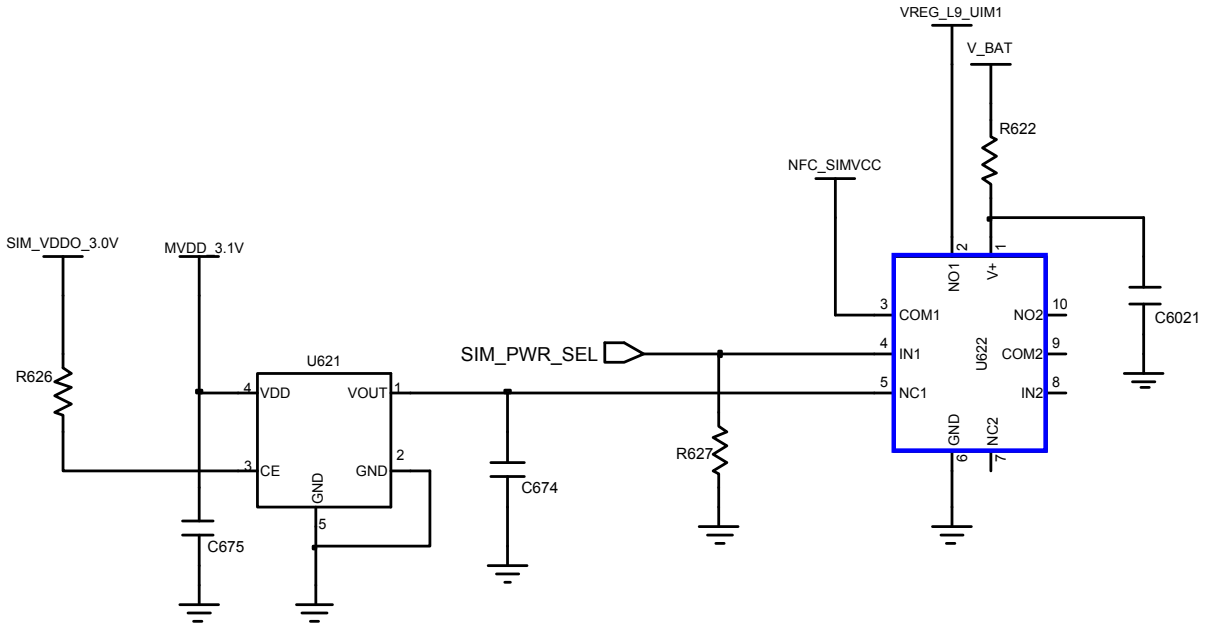

Confidential and proprietary-the contents in this service guide subject to change without prior notice.
Distribution, transmission, or infringement of any content or data from this document without Samsung's written authorization is strictly prohibited.

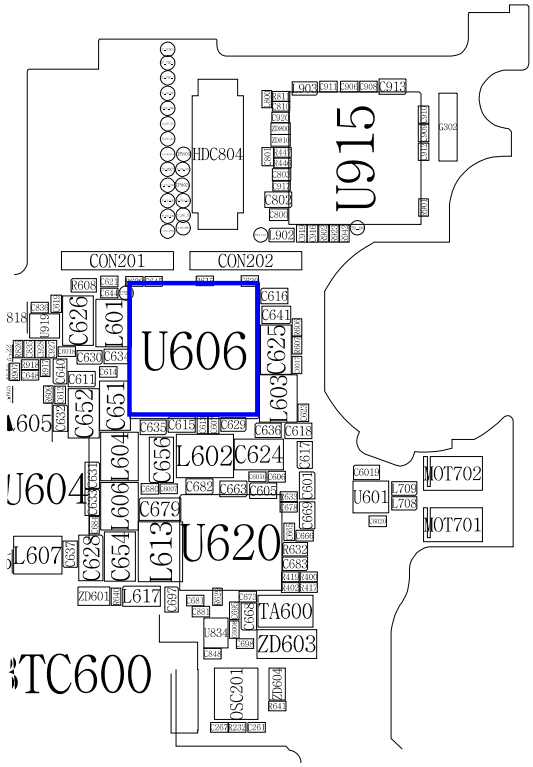

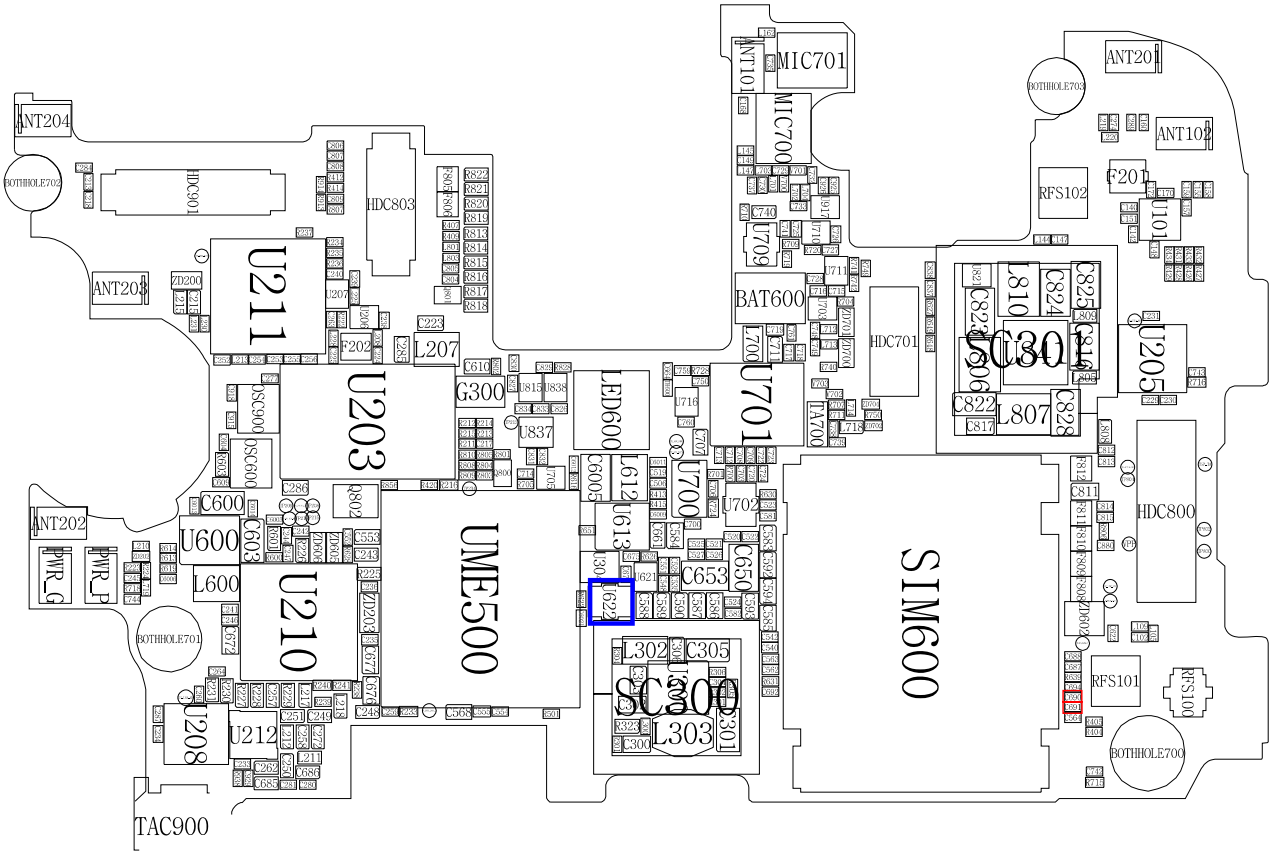

Confidential and proprietary-the contents in this service guide subject to change without prior notice.
Distribution, transmission, or infringement of any content or data from this document without Samsung's written authorization is strictly prohibited.

8-3-5.充电部分

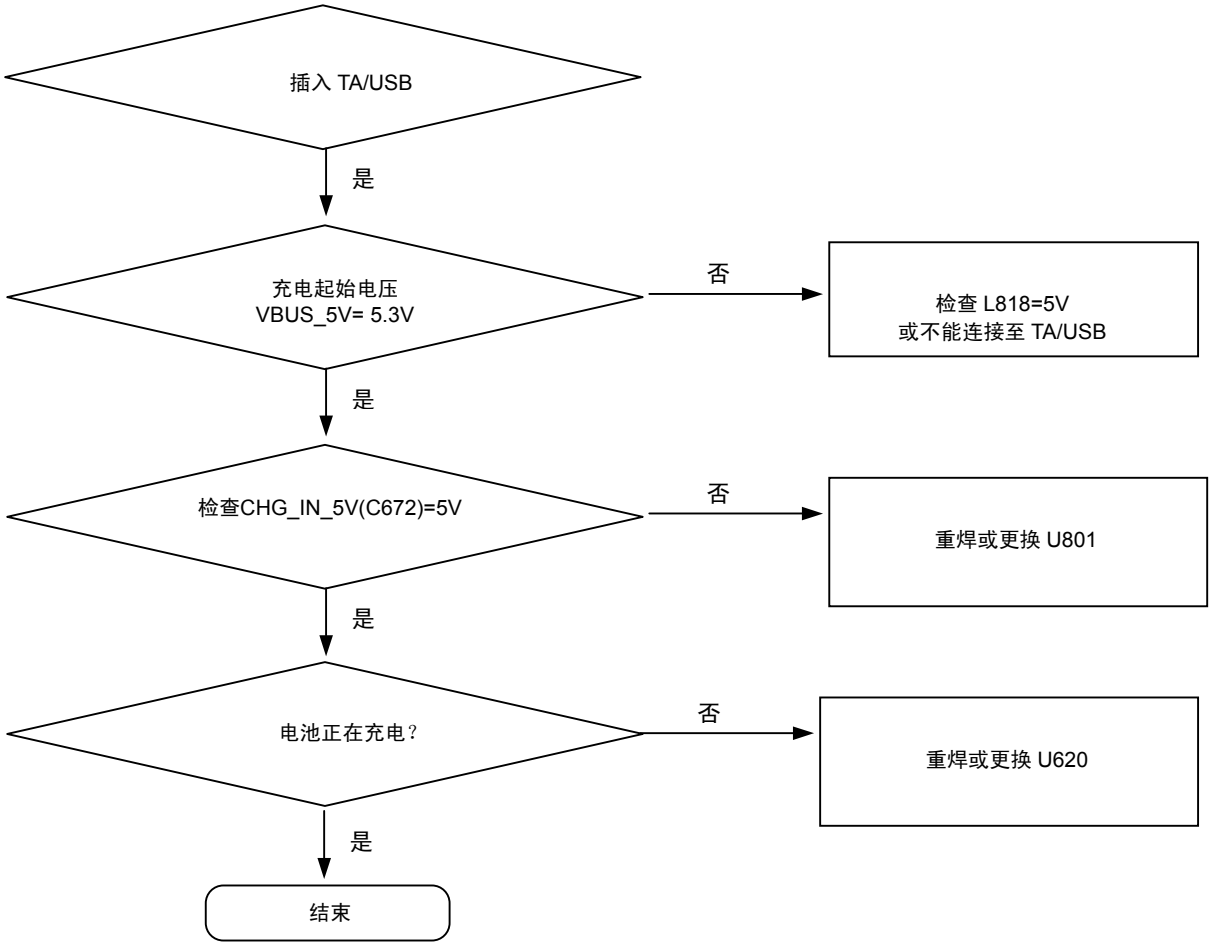

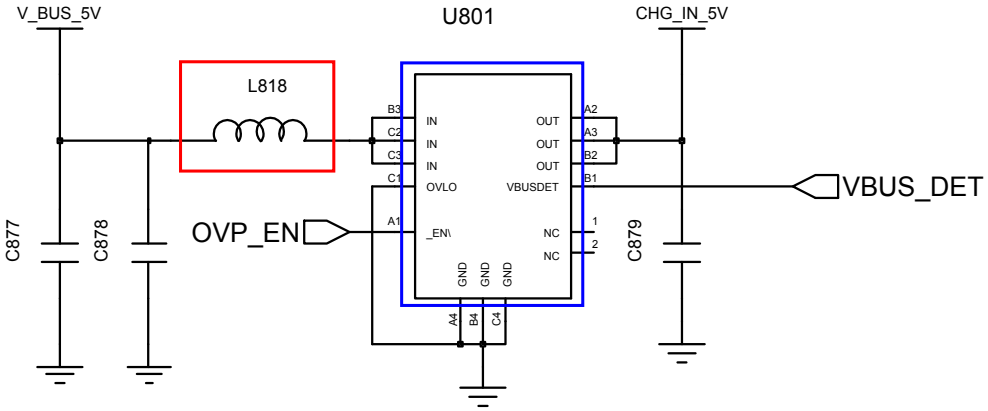

保密和所有权-本维修手册内容的变更恕不另行通知。
未经三星书面授权而发布，传送，或违背本文件中的任何内容或数据是严格禁止的。

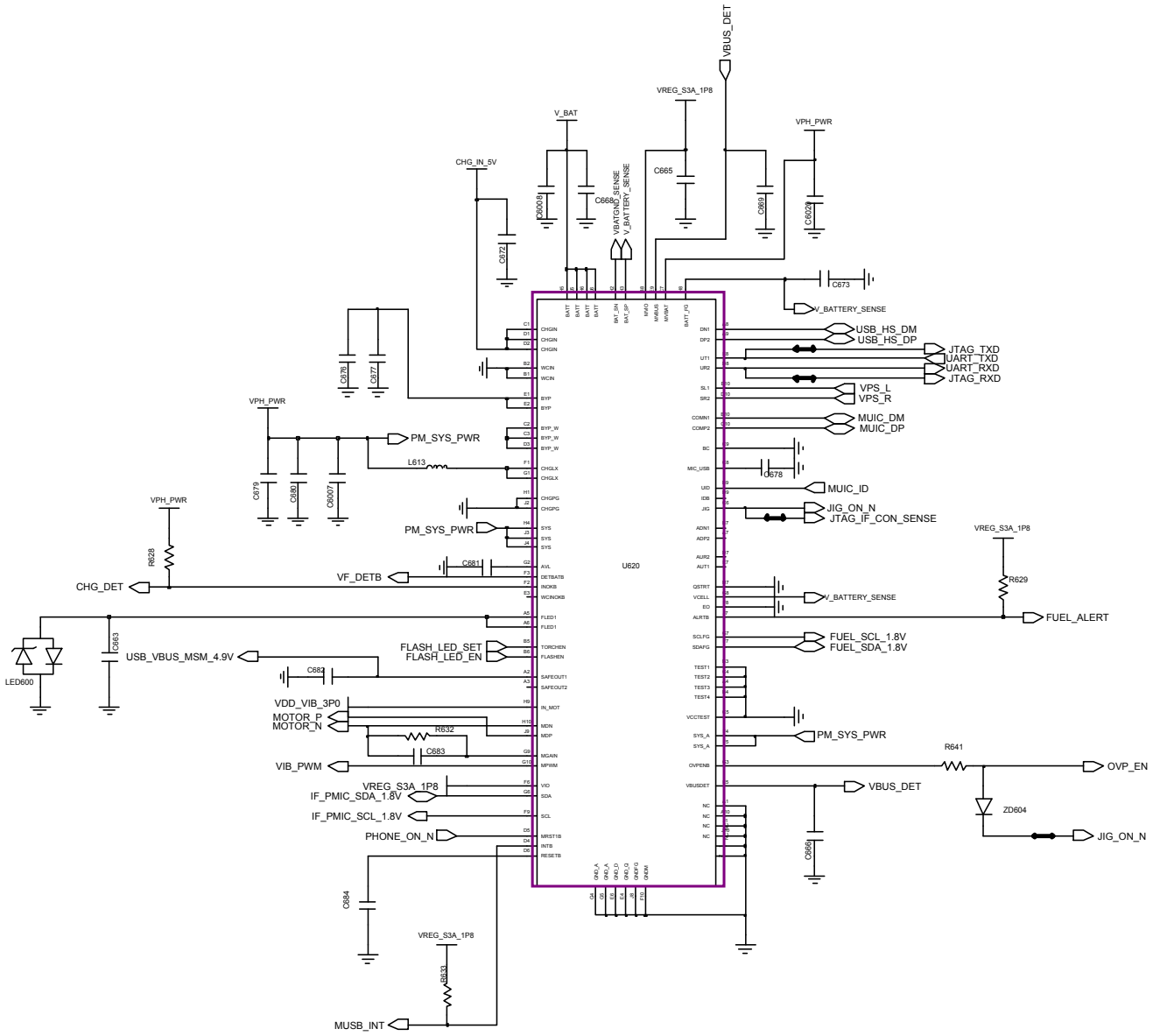

保密和所有权-本维修手册内容的变更恕不另行通知。
未经三星书面授权而发布，传送，或违背本文件中的任何内容或数据是严格禁止的。

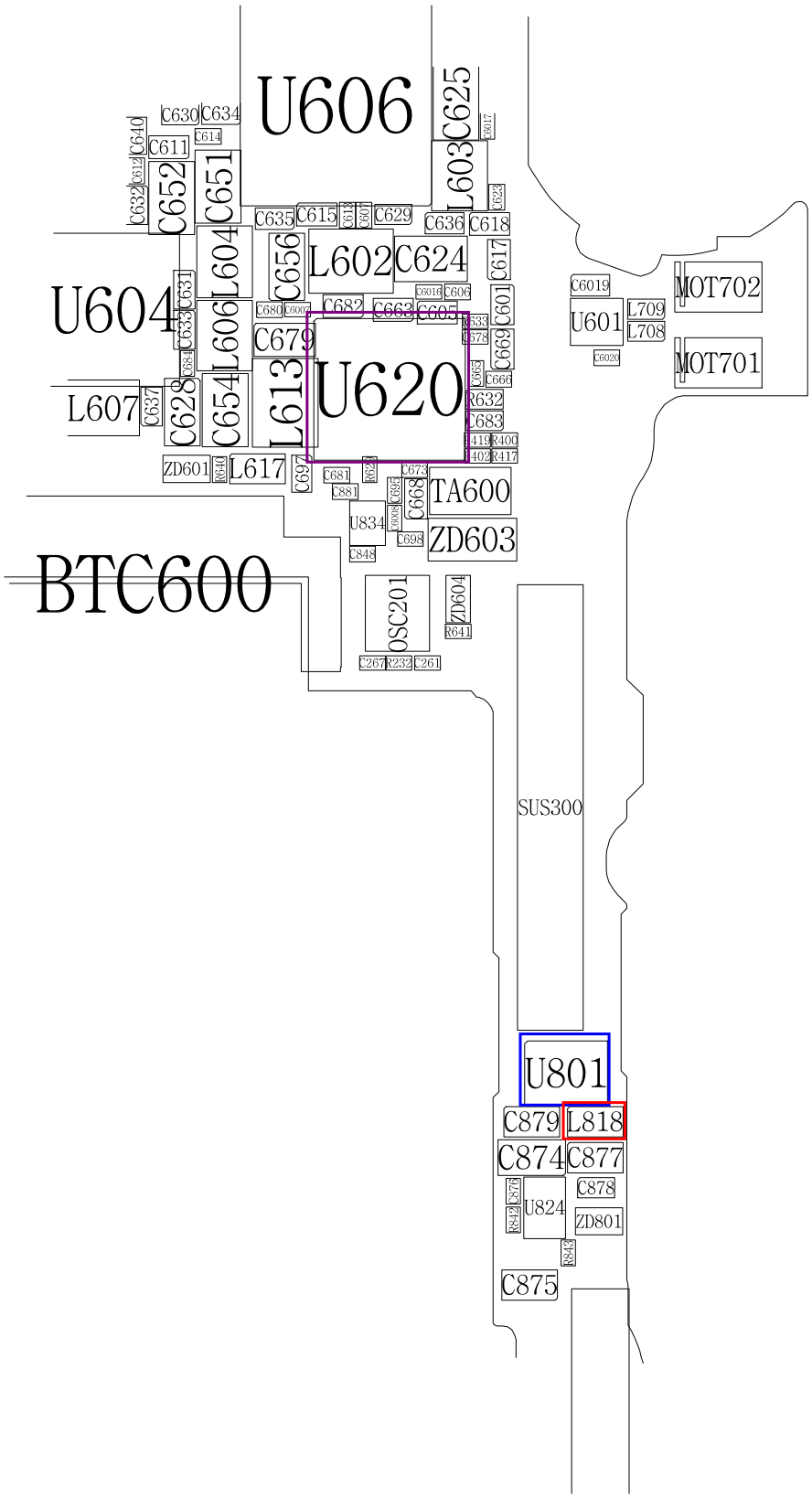

保密和所有权-本维修手册内容的变更恕不另行通知。
未经三星书面授权而发布，传送，或违背本文件中的任何内容或数据是严格禁止的。

8-3-6.OTG

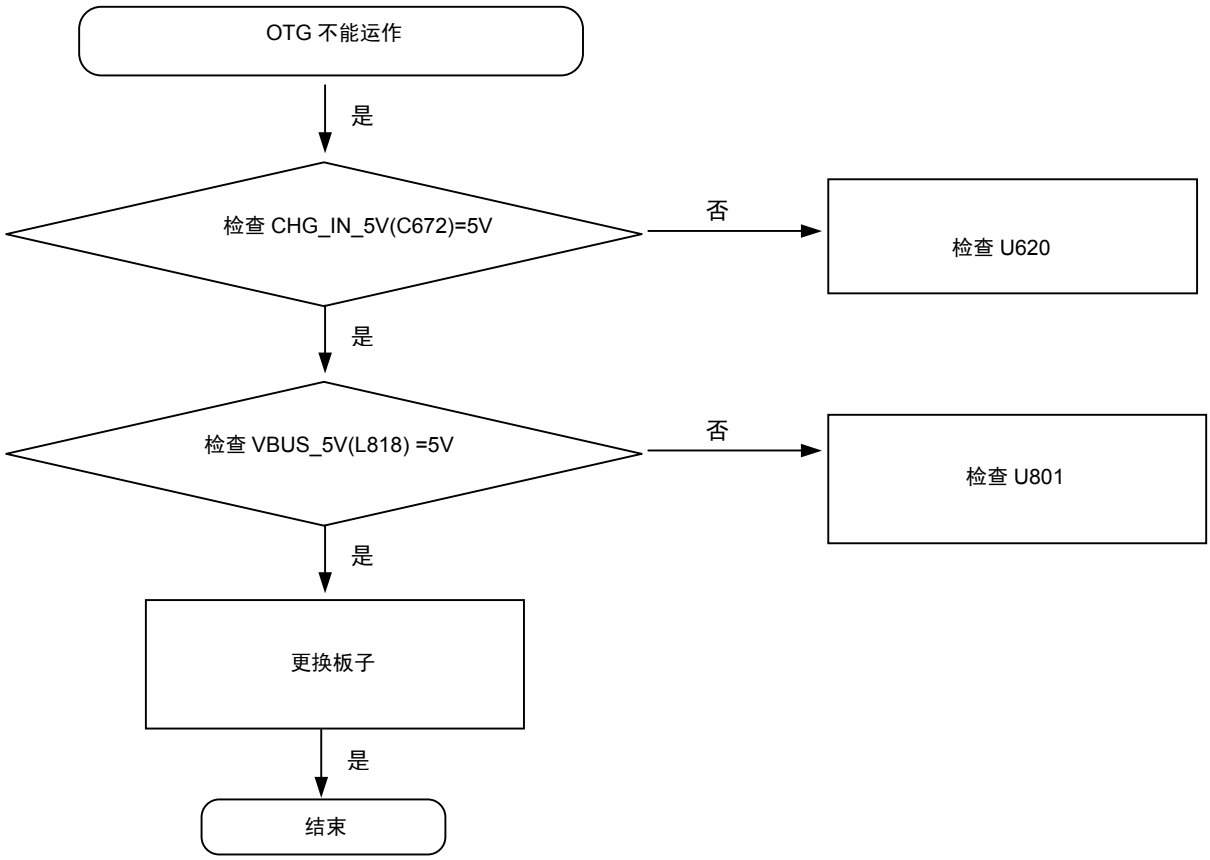

保密和所有权-本维修手册内容的变更恕不另行通知。
未经三星书面授权而发布，传送，或违背本文件中的任何内容或数据是严格禁止的。

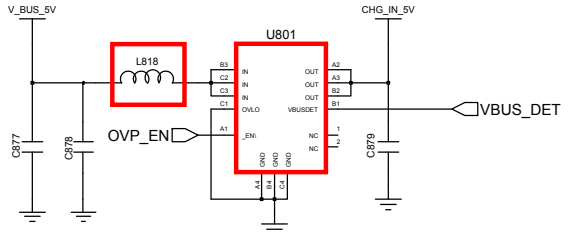

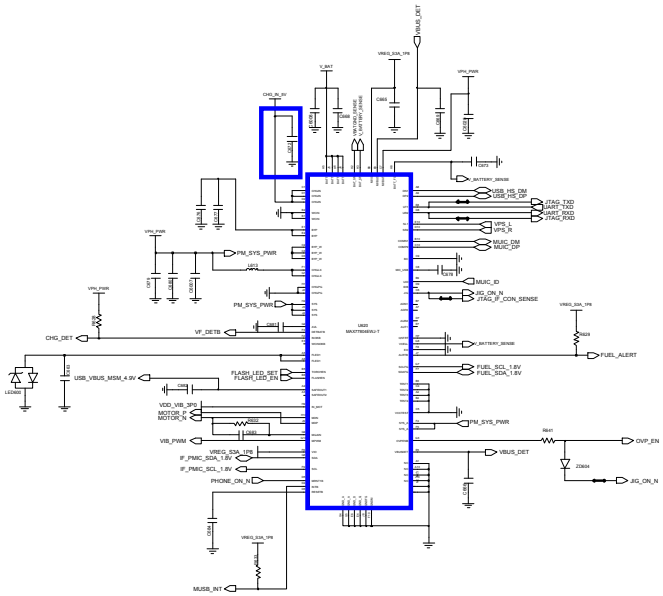

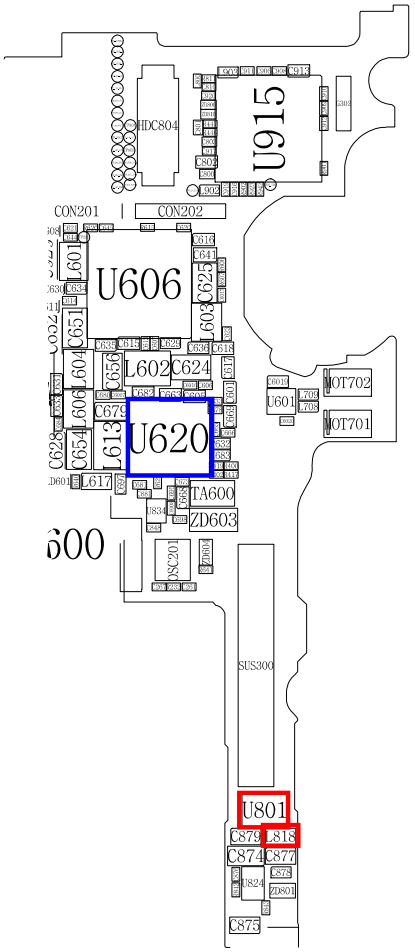

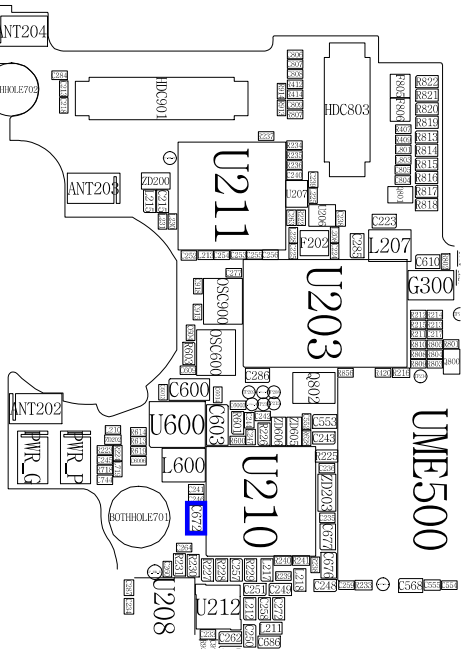

Confidential and proprietary-the contents in this service guide subject to change without prior notice.
Distribution, transmission, or infringement of any content or data from this document without Samsung's written authorization is strictly prohibited.

8-3-7.传感器

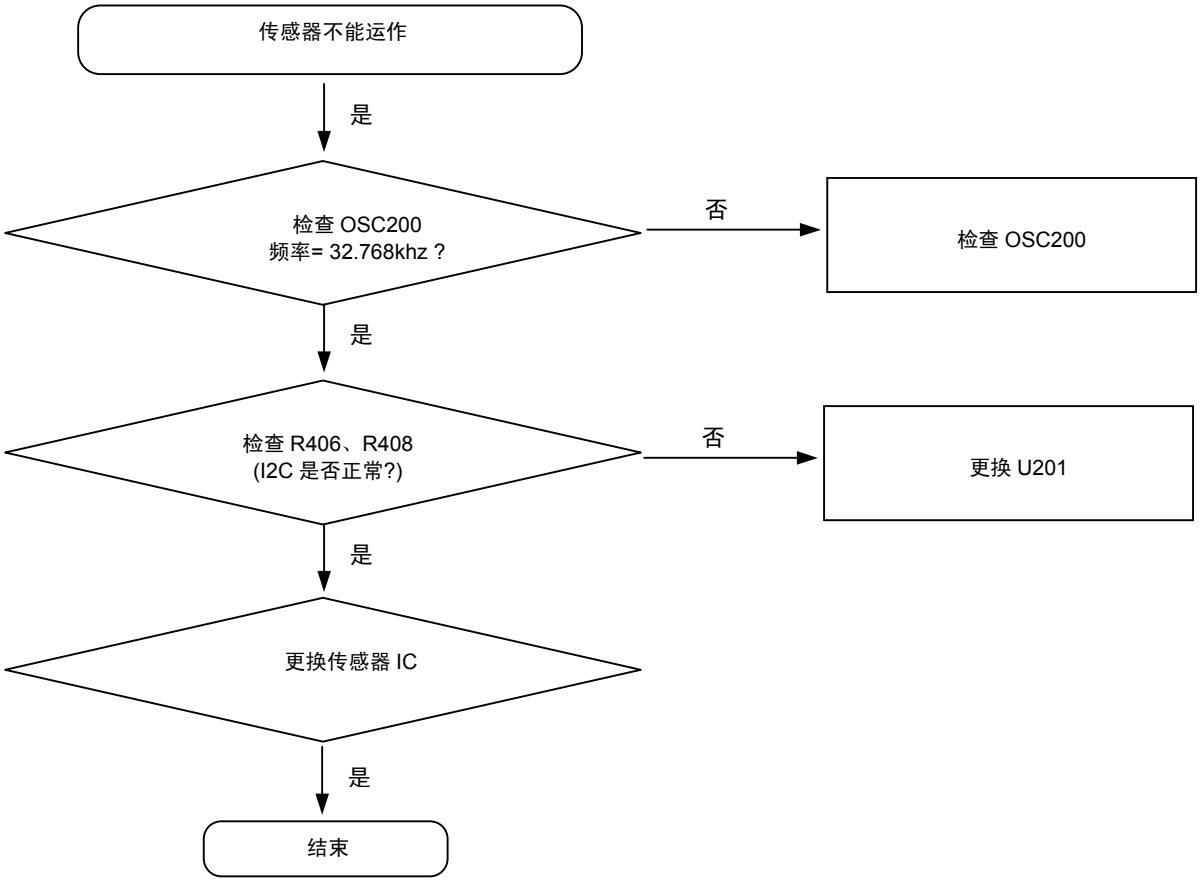

保密和所有权-本维修手册内容的变更恕不另行通知。
未经三星书面授权而发布，传送，或违背本文件中的任何内容或数据是严格禁止的。

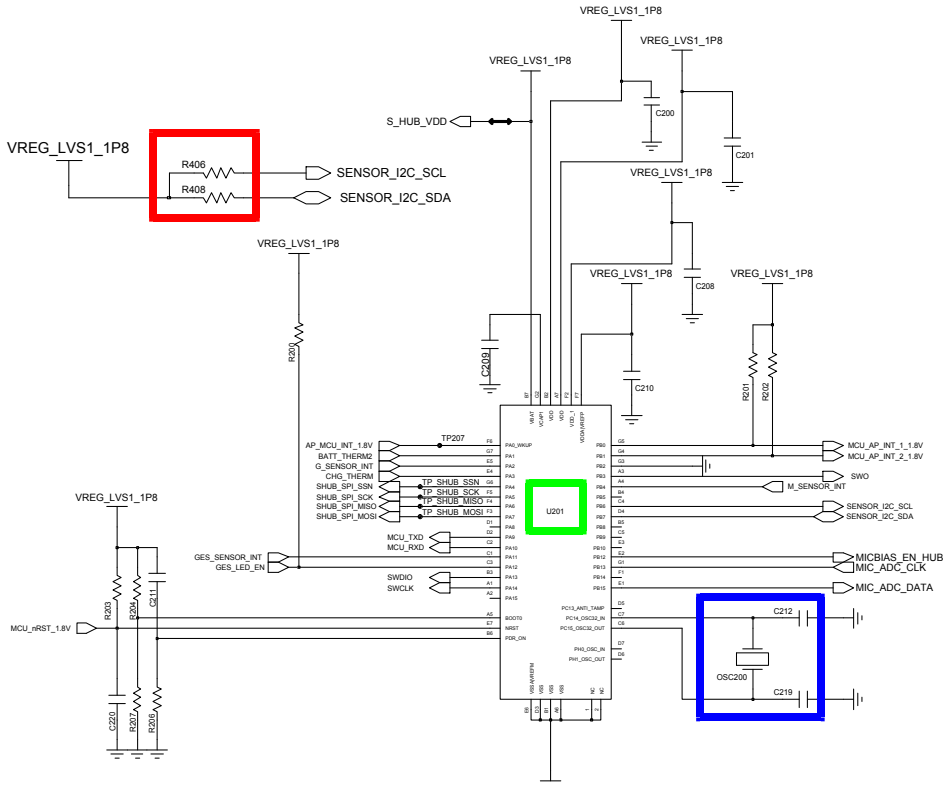

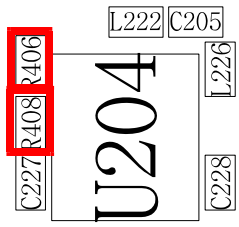

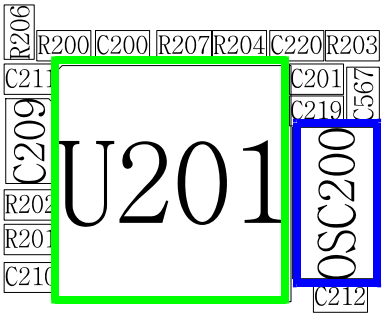

保密和所有权-本维修手册内容的变更恕不另行通知。
未经三星书面授权而发布，传送，或违背本文件中的任何内容或数据是严格禁止的。

8-3-8-1.话筒部分-主话筒

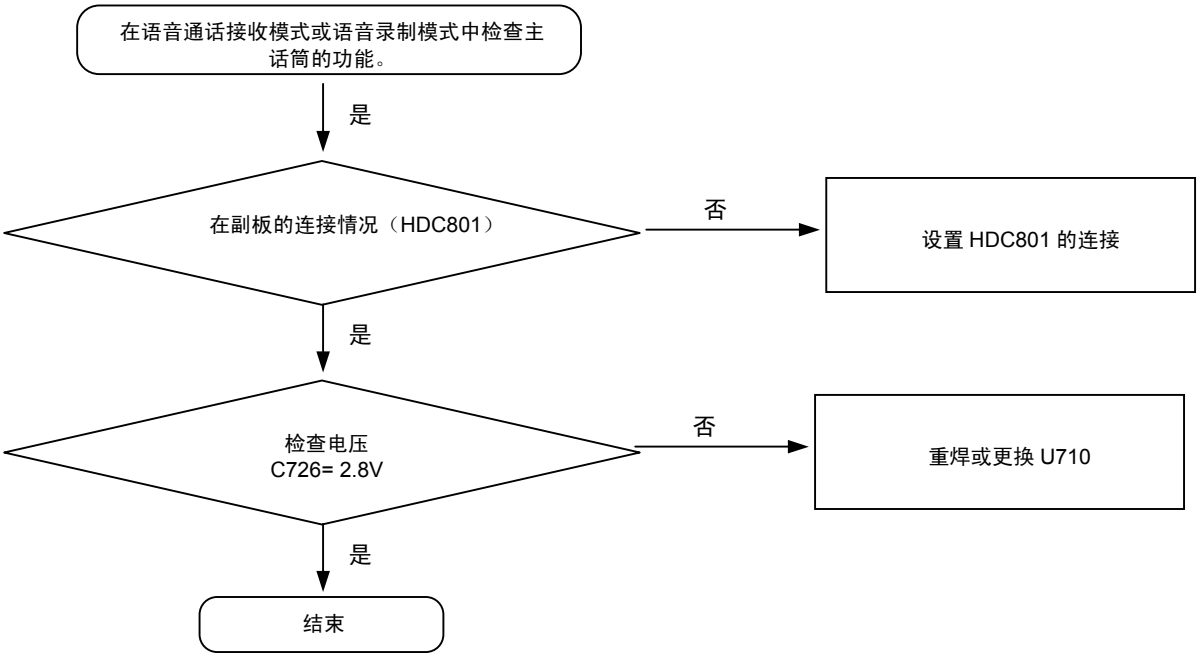

保密和所有权-本维修手册内容的变更恕不另行通知。
未经三星书面授权而发布，传送，或违背本文件中的任何内容或数据是严格禁止的。

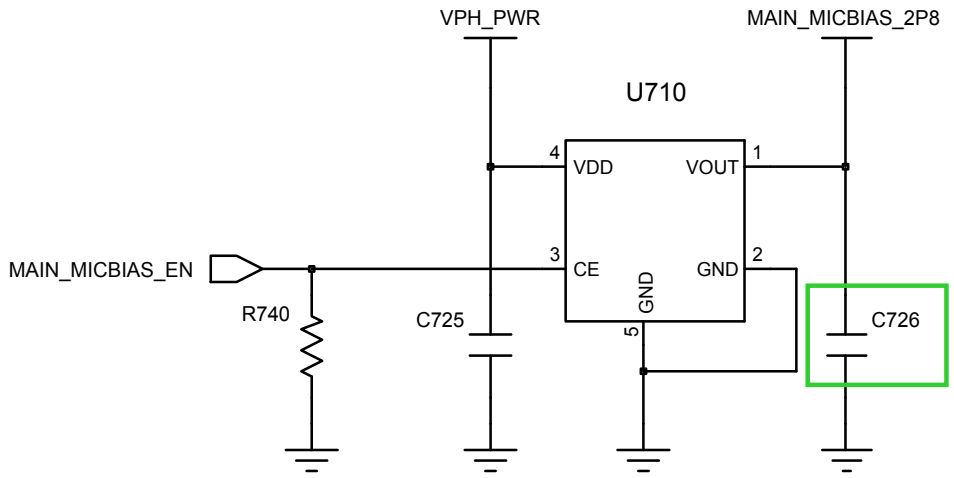

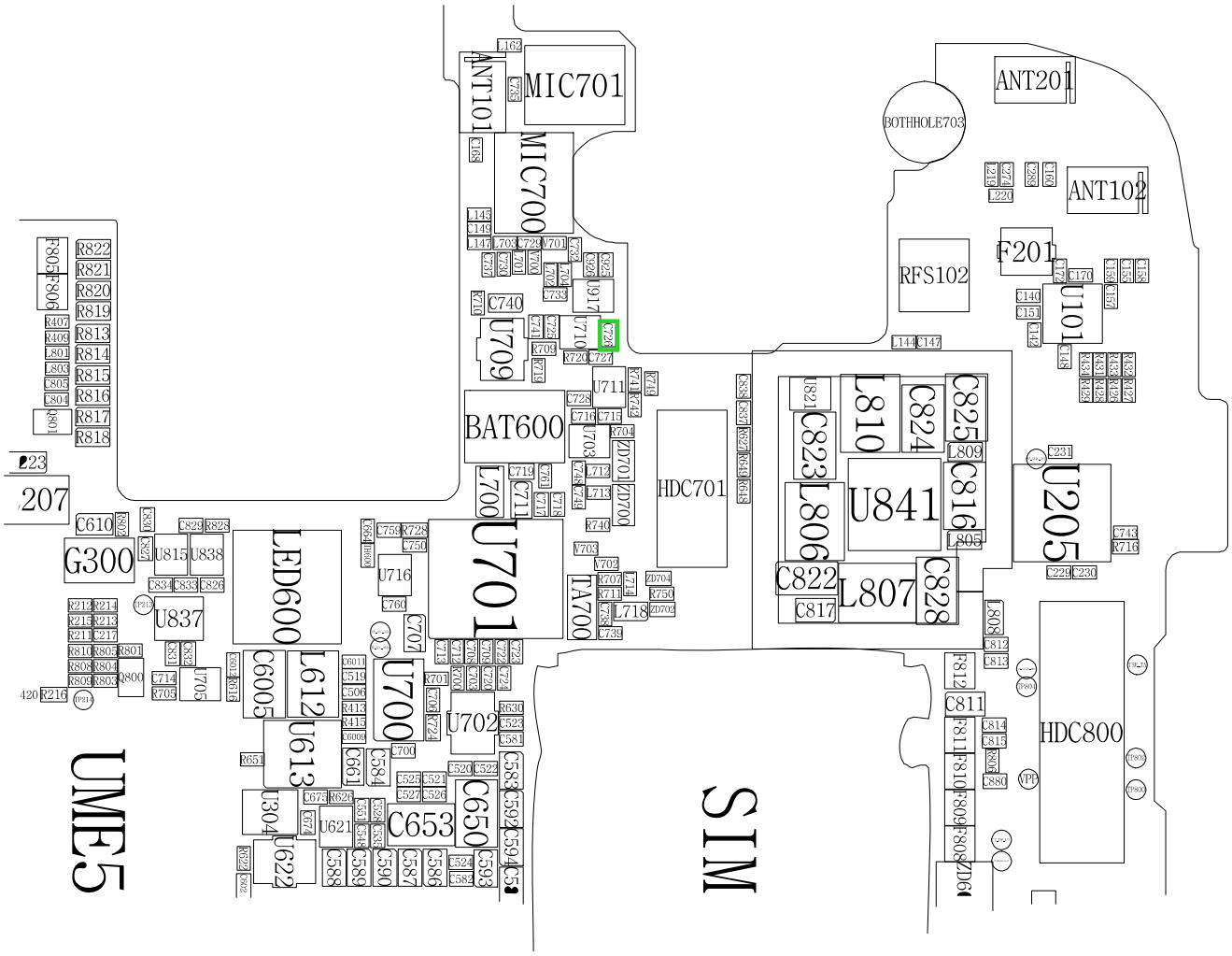
UME5
SIM
MIC701
MIC700
ANT101
ANT201
ANT102
BOTHHOLE703
RFS102
F201
U101
C740
U709
U710
U711
BAT600
HDC701
L810
C824
C825
C823
L806
U841
C816
C822
L807
C828
C817
U205
HDC800
G300
U815
U838
U837
LED600
C6005
L612
U613
U304
U622
U621
U716
U701
U700
U702
C650
C653
TA700
L718
L700
C711
D700
D701
C610
Q800
L705
F809
F806
R822
R821
R820
R819
R813
R814
R815
R816
R817
R818
C811
F812
F811
F810
F809
F808
C812
C813
C814
C815
C880
L808
L809
L805
C743
R716
C229
C230
C231
L144
C147
L162
L163
L143
L149
L147
L703
C729
V701
C732
C733
C727
R720
R709
R713
C728
C716
C715
R704
V703
V702
R707
R711
L713
L712
C719
C705
C718
C717
R740
R750
ZD704
ZD702
C739
C759
R728
C750
C760
C707
C713
C714
R701
R706
R630
C523
C581
C583
C592
C594
C584
C661
C700
C520
C522
C525
C521
C527
C526
C673
R626
C674
C588
C589
C590
C587
C586
C524
C582
C593
R651
R622
R602
R216
420
R213
R214
R215
R211
R217
R810
R805
R801
R808
R804
R809
R803
C834
C833
C826
C829
R828
R830
R827
C831
C832
C714
C705
C6011
C519
C506
R413
R415
C6009
C661
C584
C700
C650
C653
U702
U716
U701
U700
U621
U622
U304
U837
U815
U838
U841
U205
U101
U917
U710
U711
U709
U716
U701
U700
U702
U705

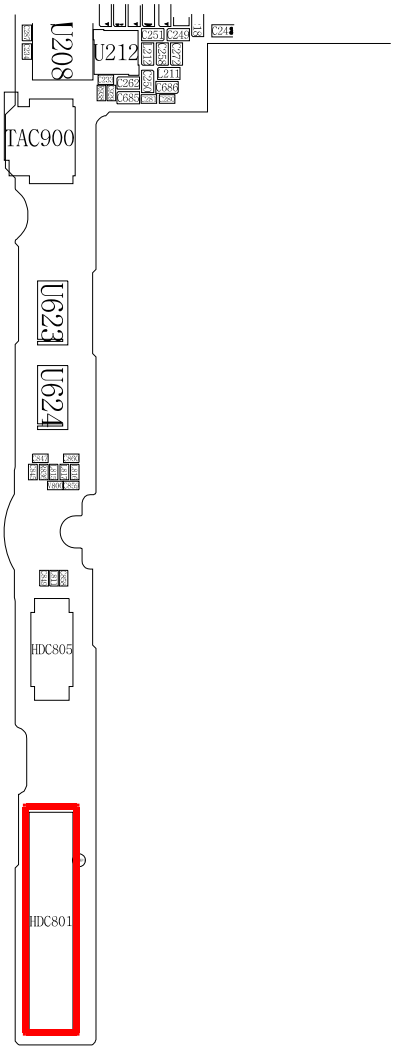

保密和所有权-本维修手册内容的变更恕不另行通知。
未经三星书面授权而发布，传送，或违背本文件中的任何内容或数据是严格禁止的。

8-3-8-2.话筒部分-副(第 2)话筒

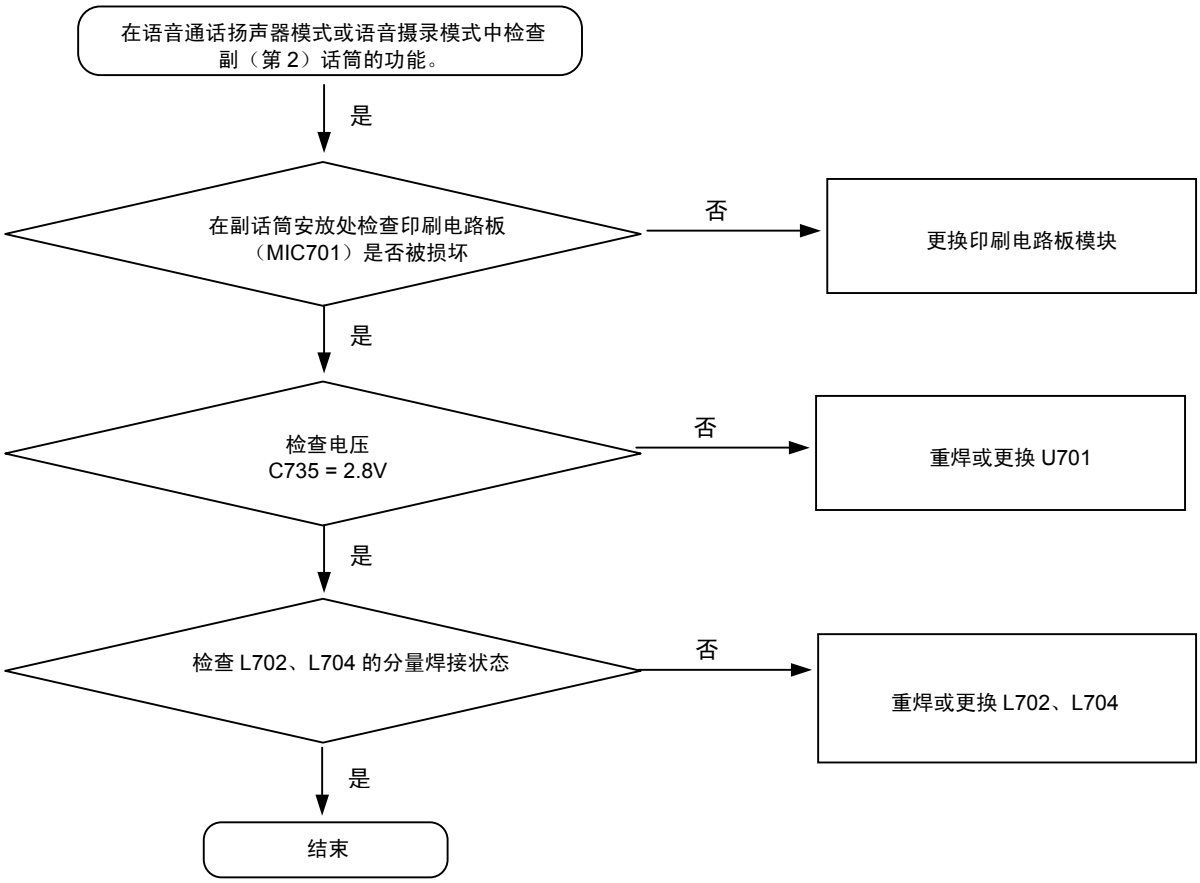

保密和所有权-本维修手册内容的变更恕不另行通知。
未经三星书面授权而发布，传送，或违背本文件中的任何内容或数据是严格禁止的。

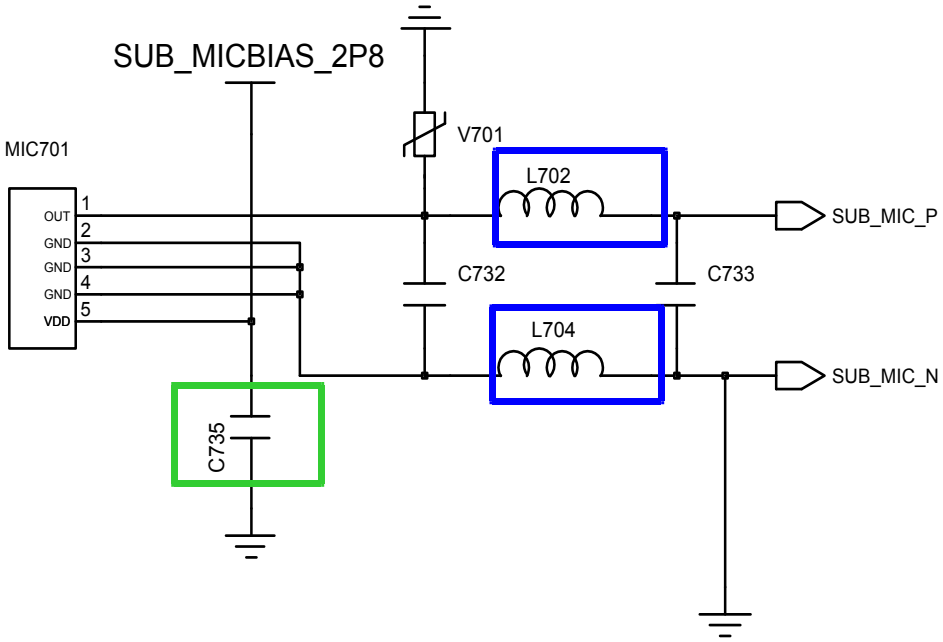

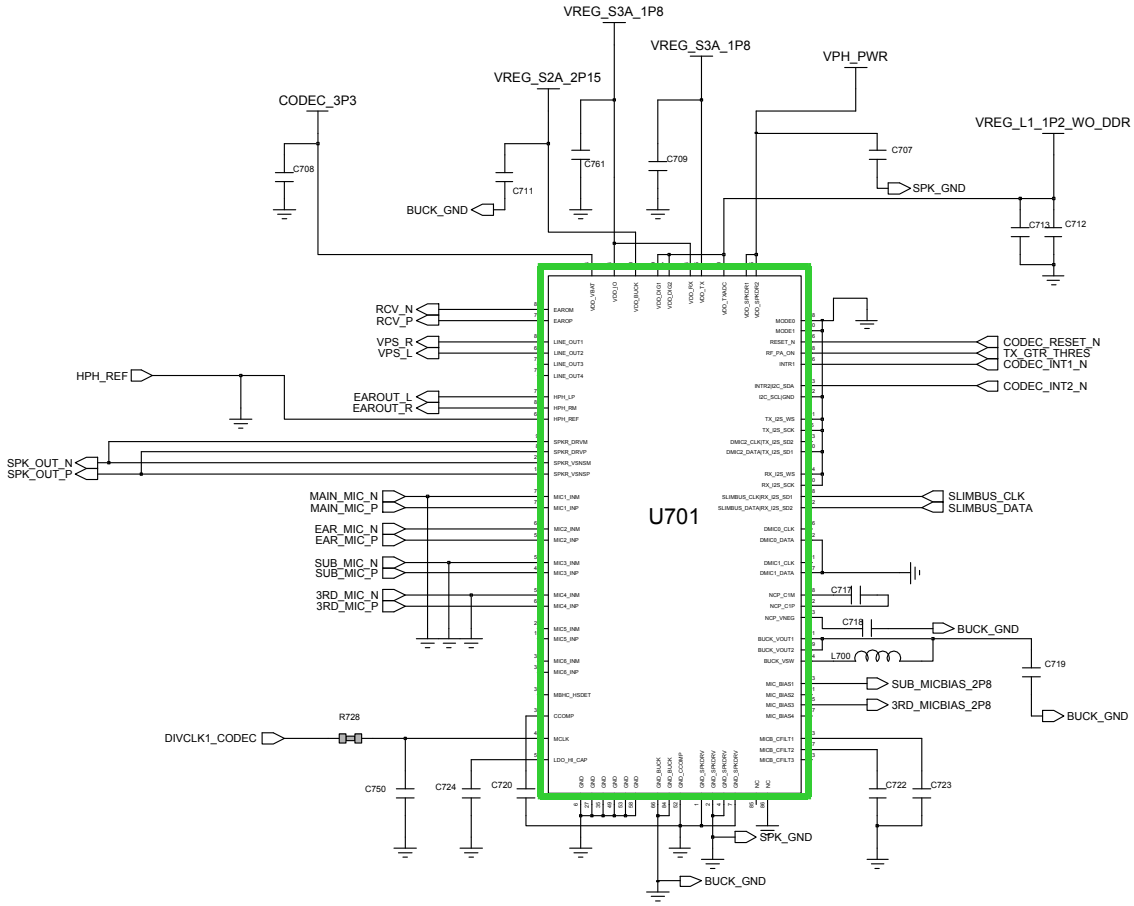

Confidential and proprietary-the contents in this service guide subject to change without prior notice.
Distribution, transmission, or infringement of any content or data from this document without Samsung's written authorization is strictly prohibited.

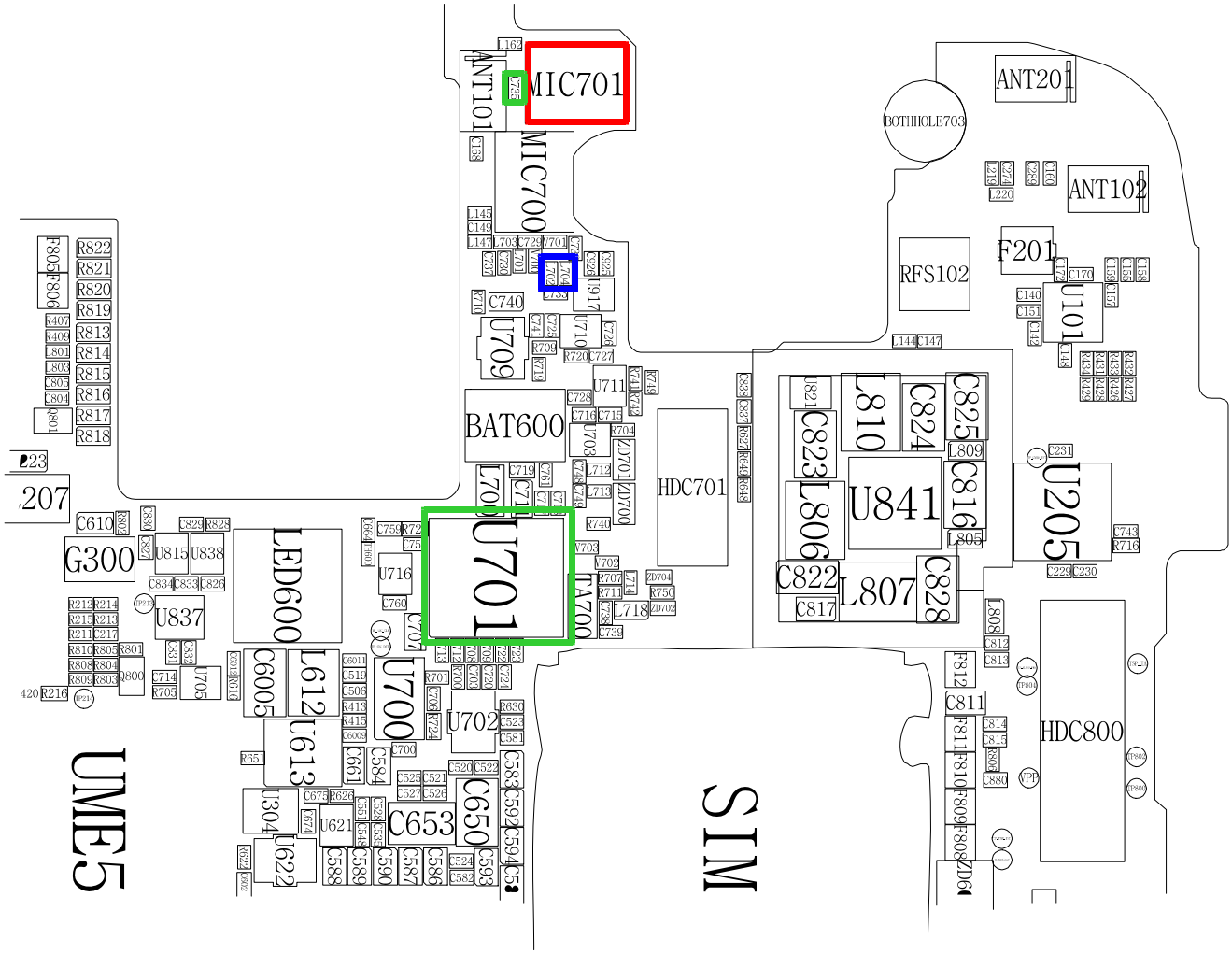

保密和所有权-本维修手册内容的变更恕不另行通知。
未经三星书面授权而发布，传送，或违背本文件中的任何内容或数据是严格禁止的。

8-3-8-3.话筒部分-副(第 3)话筒

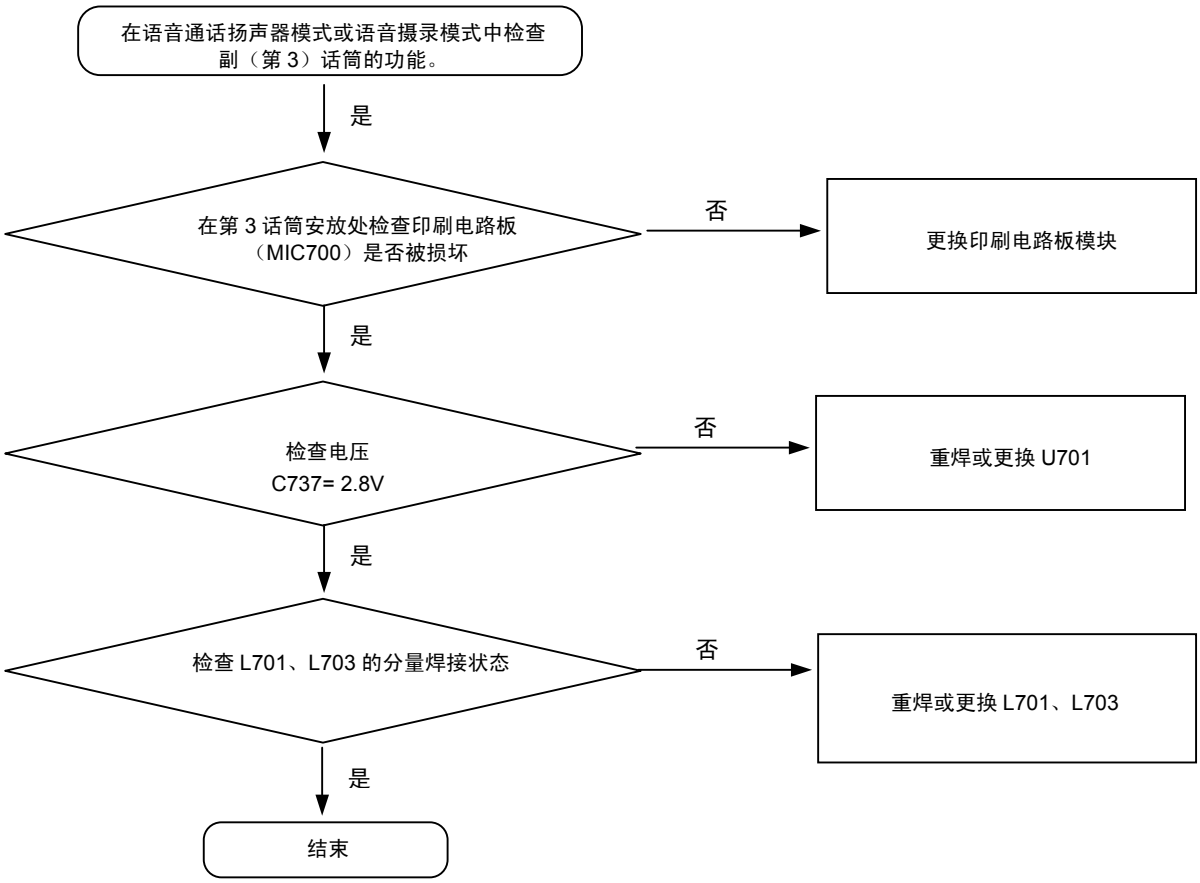

保密和所有权-本维修手册内容的变更恕不另行通知。
未经三星书面授权而发布，传送，或违背本文件中的任何内容或数据是严格禁止的。

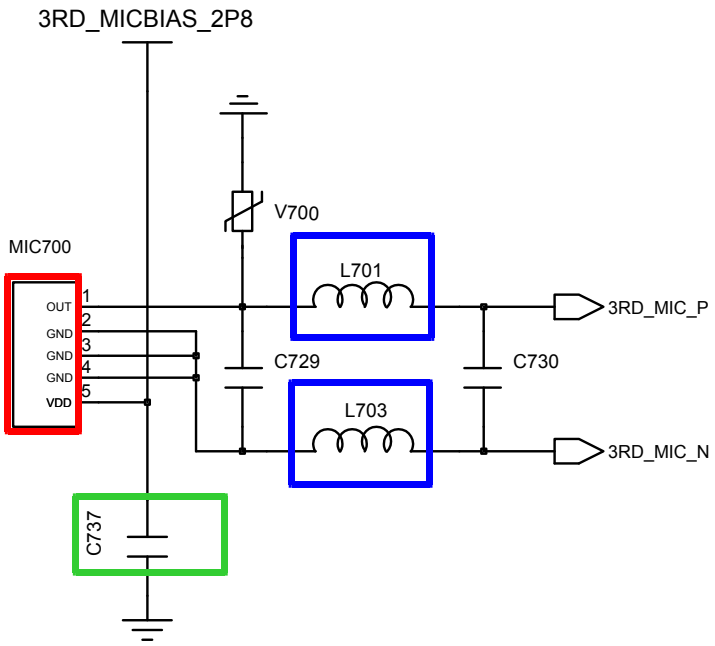

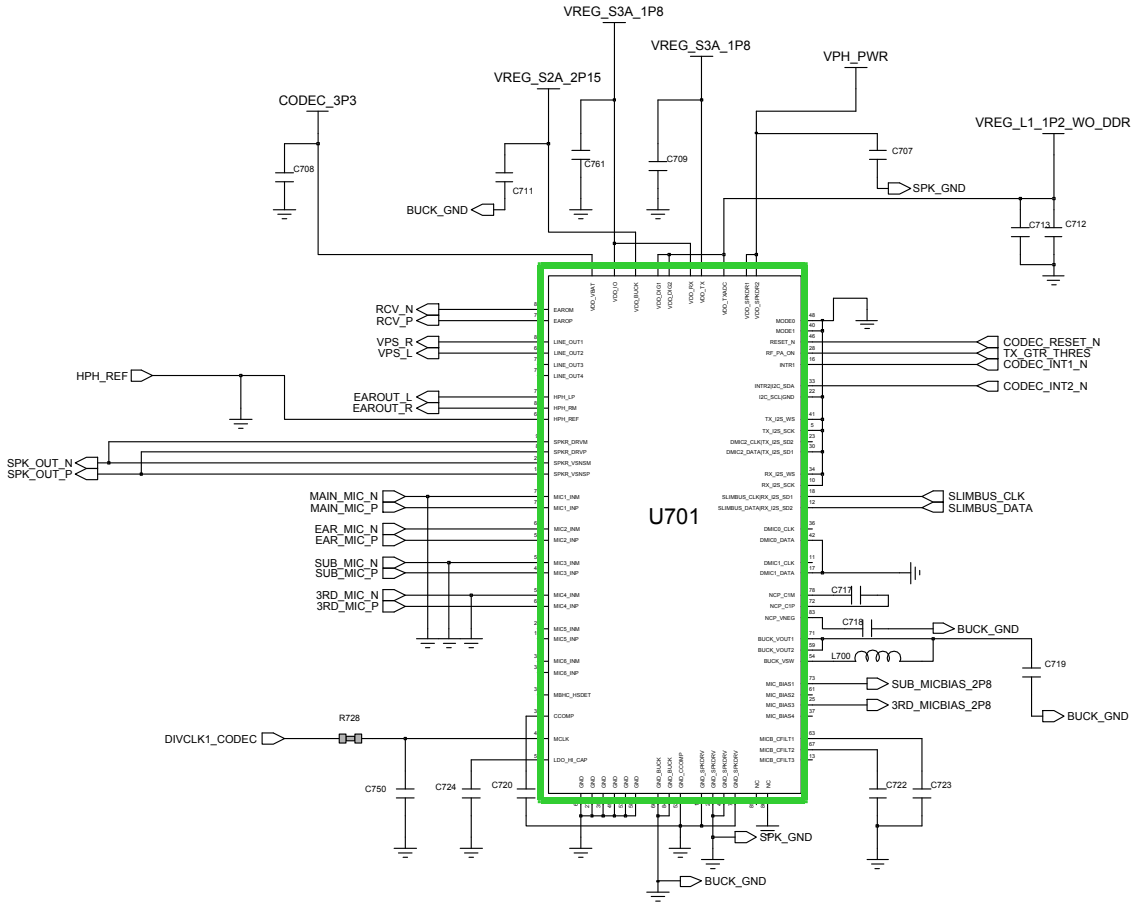

Confidential and proprietary-the contents in this service guide subject to change without prior notice.
Distribution, transmission, or infringement of any content or data from this document without Samsung's written authorization is strictly prohibited.

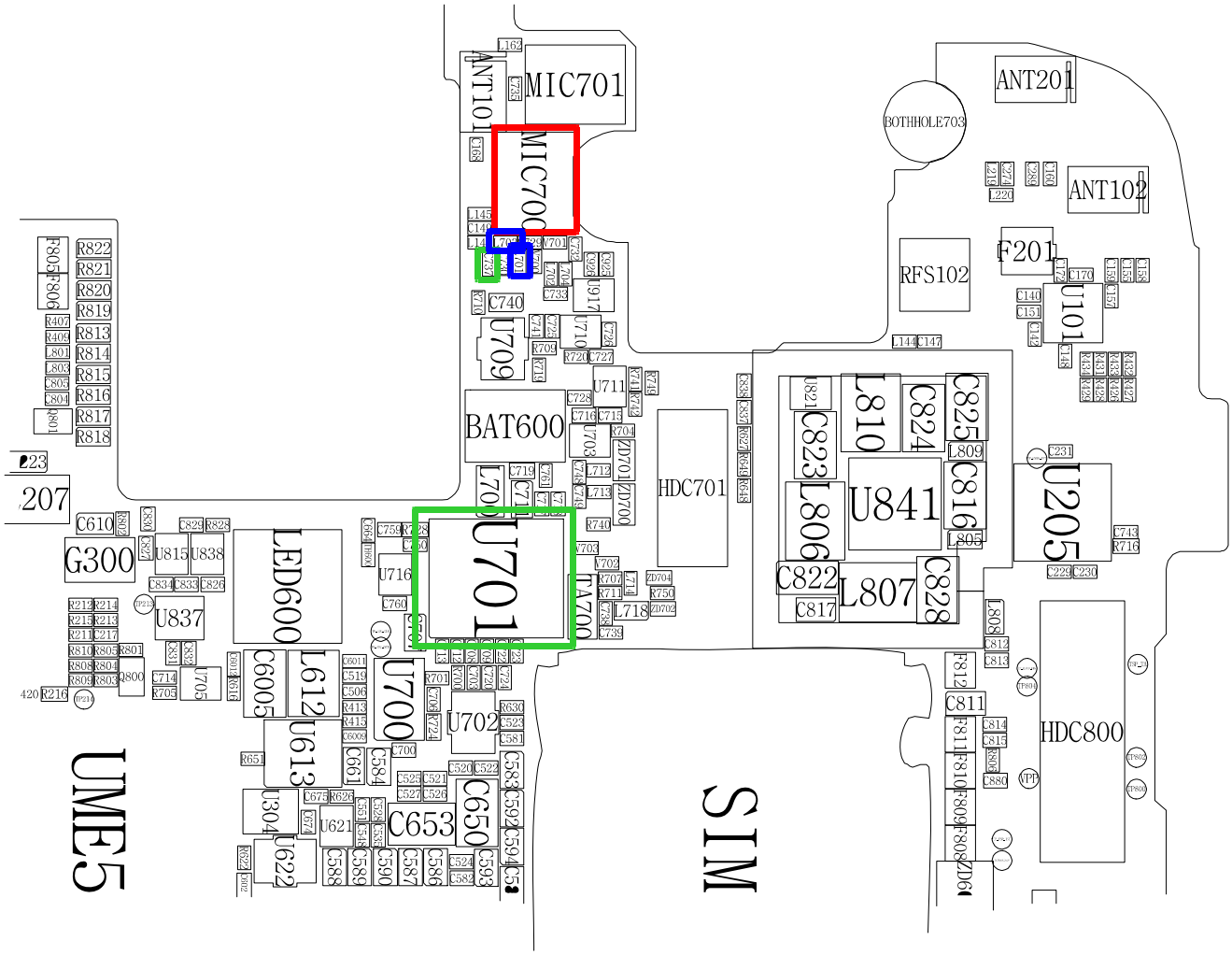

保密和所有权-本维修手册内容的变更恕不另行通知。
未经三星书面授权而发布，传送，或违背本文件中的任何内容或数据是严格禁止的。

8-3-9.扬声器部分

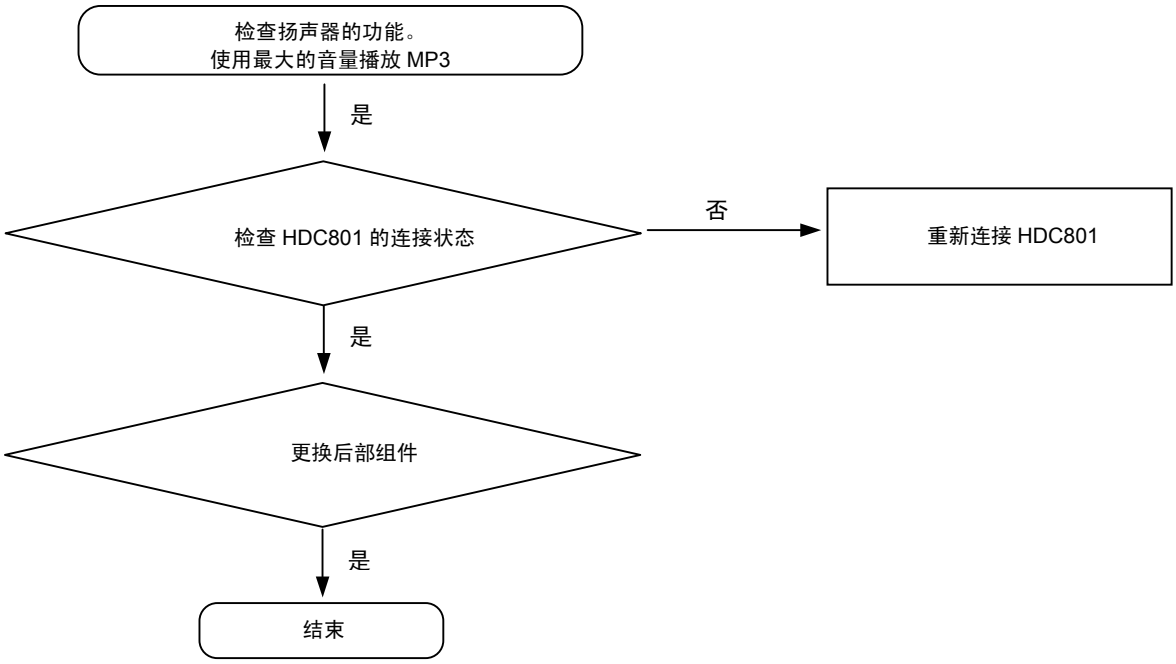

保密和所有权-本维修手册内容的变更恕不另行通知。
未经三星书面授权而发布，传送，或违背本文件中的任何内容或数据是严格禁止的。

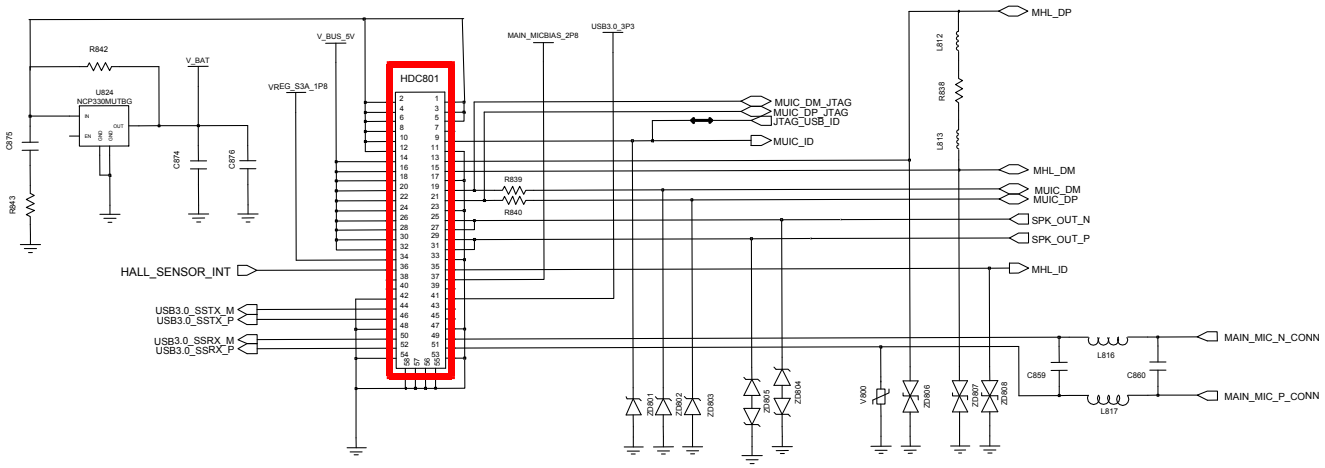

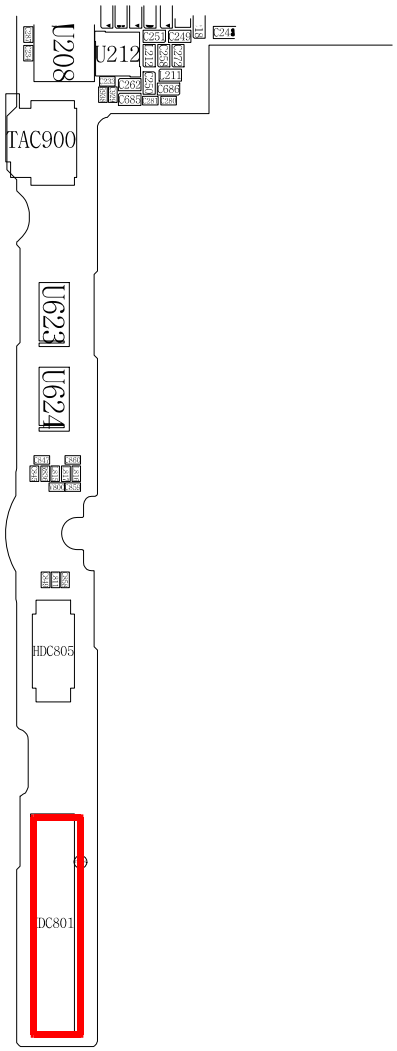

Confidential and proprietary-the contents in this service guide subject to change without prior notice.
Distribution, transmission, or infringement of any content or data from this document without Samsung's written authorization is strictly prohibited.

8-3-10.接收器部分

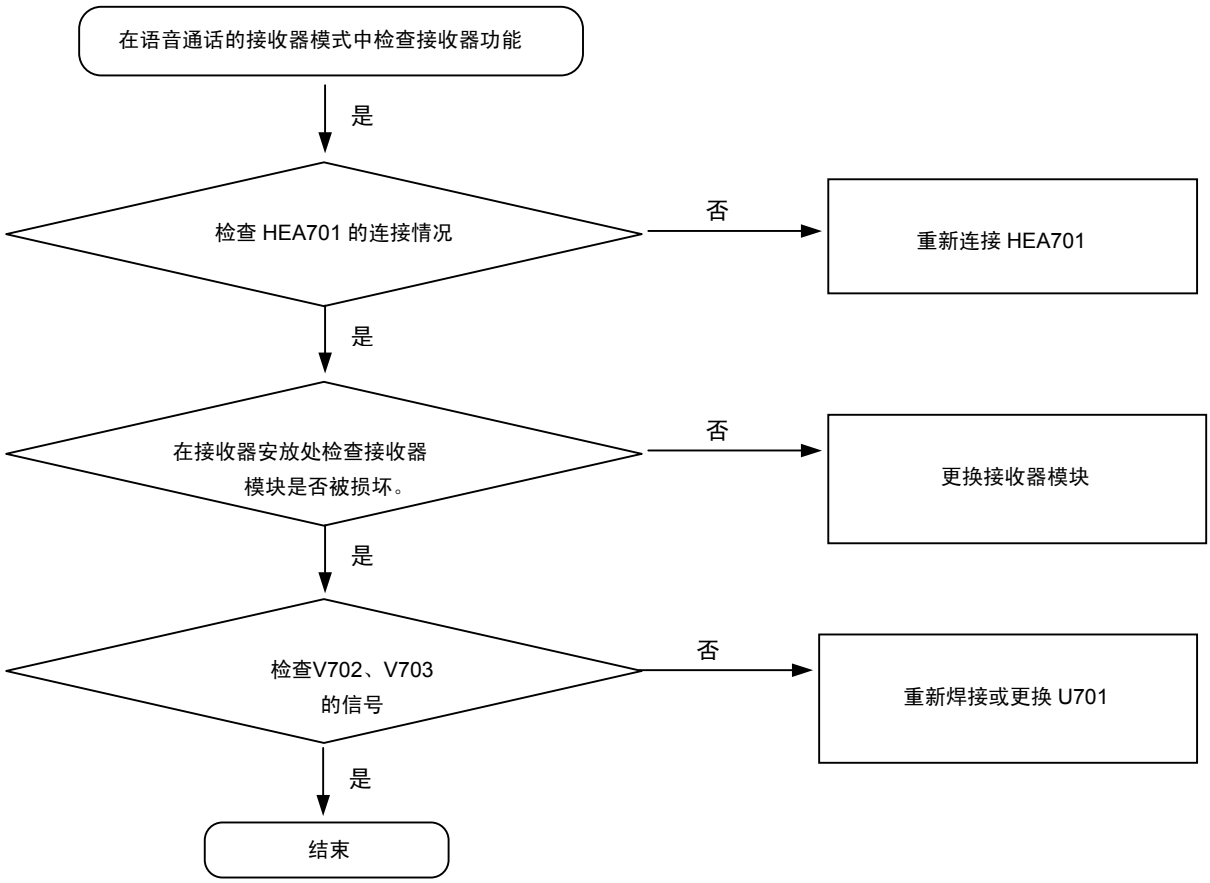

保密和所有权-本维修手册内容的变更恕不另行通知。
未经三星书面授权而发布，传送，或违背本文件中的任何内容或数据是严格禁止的。

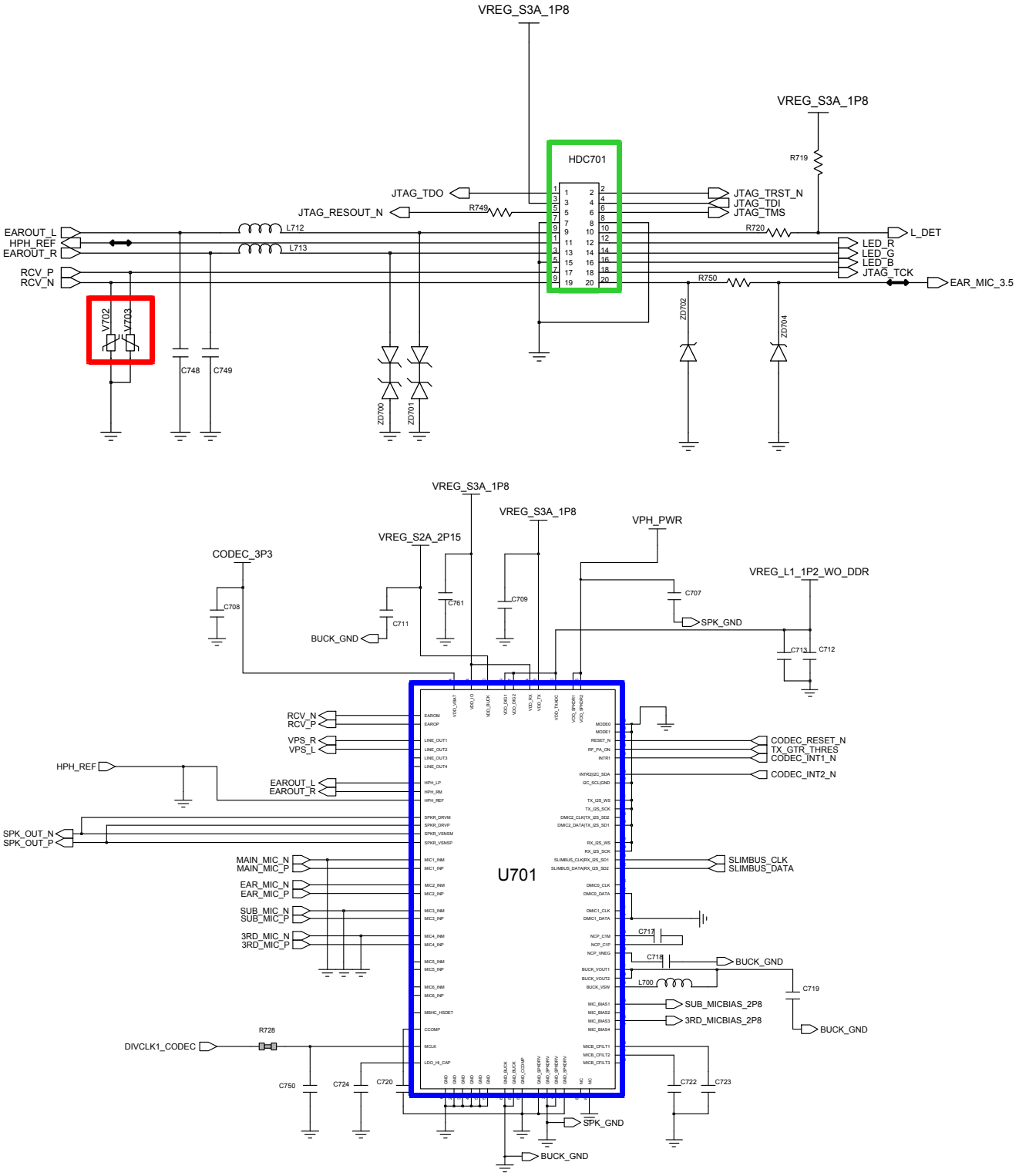

Confidential and proprietary-the contents in this service guide subject to change without prior notice.
Distribution, transmission, or infringement of any content or data from this document without Samsung's written authorization is strictly prohibited.

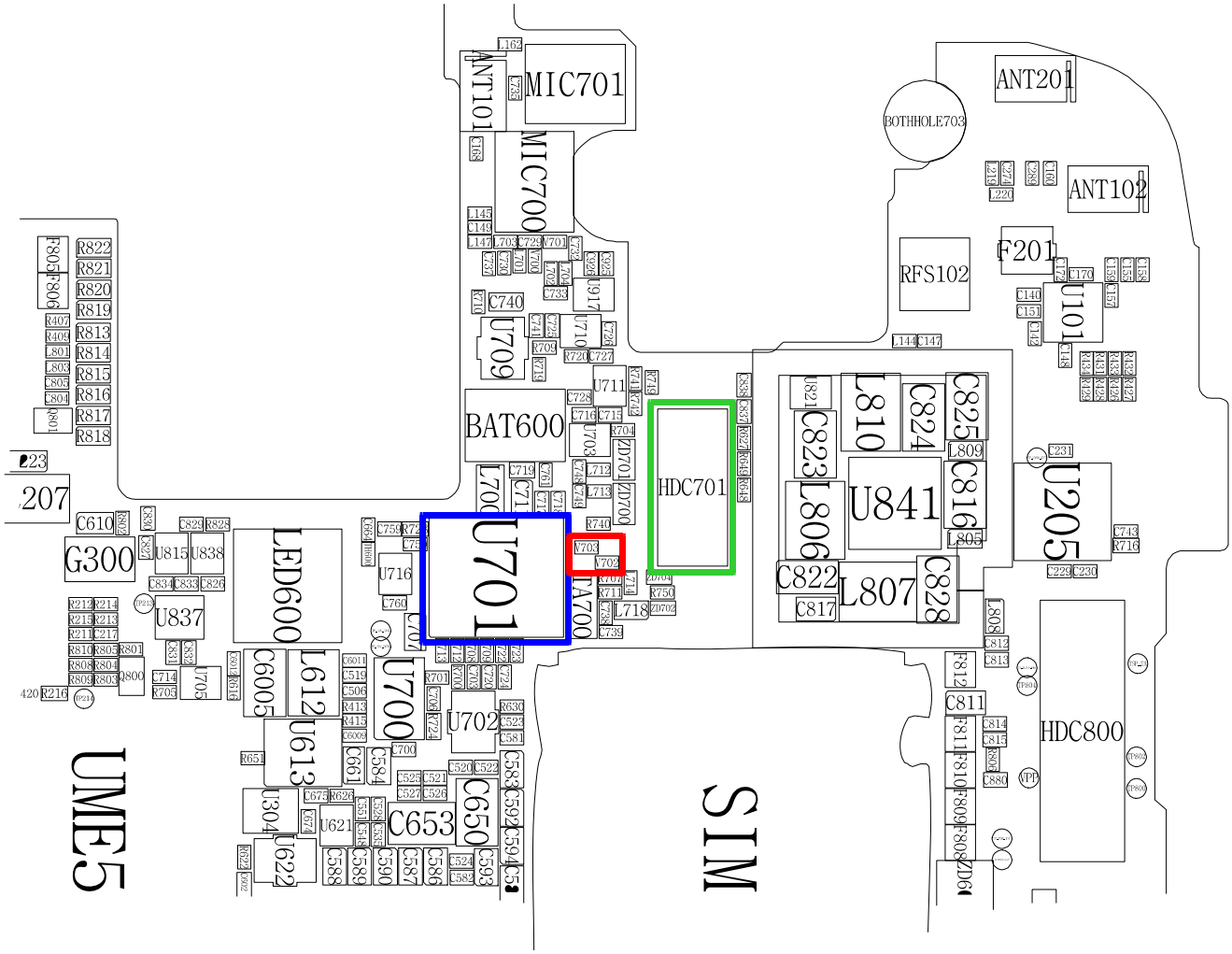

保密和所有权-本维修手册内容的变更恕不另行通知。
未经三星书面授权而发布，传送，或违背本文件中的任何内容或数据是严格禁止的。

8-3-11.BT/WIFI

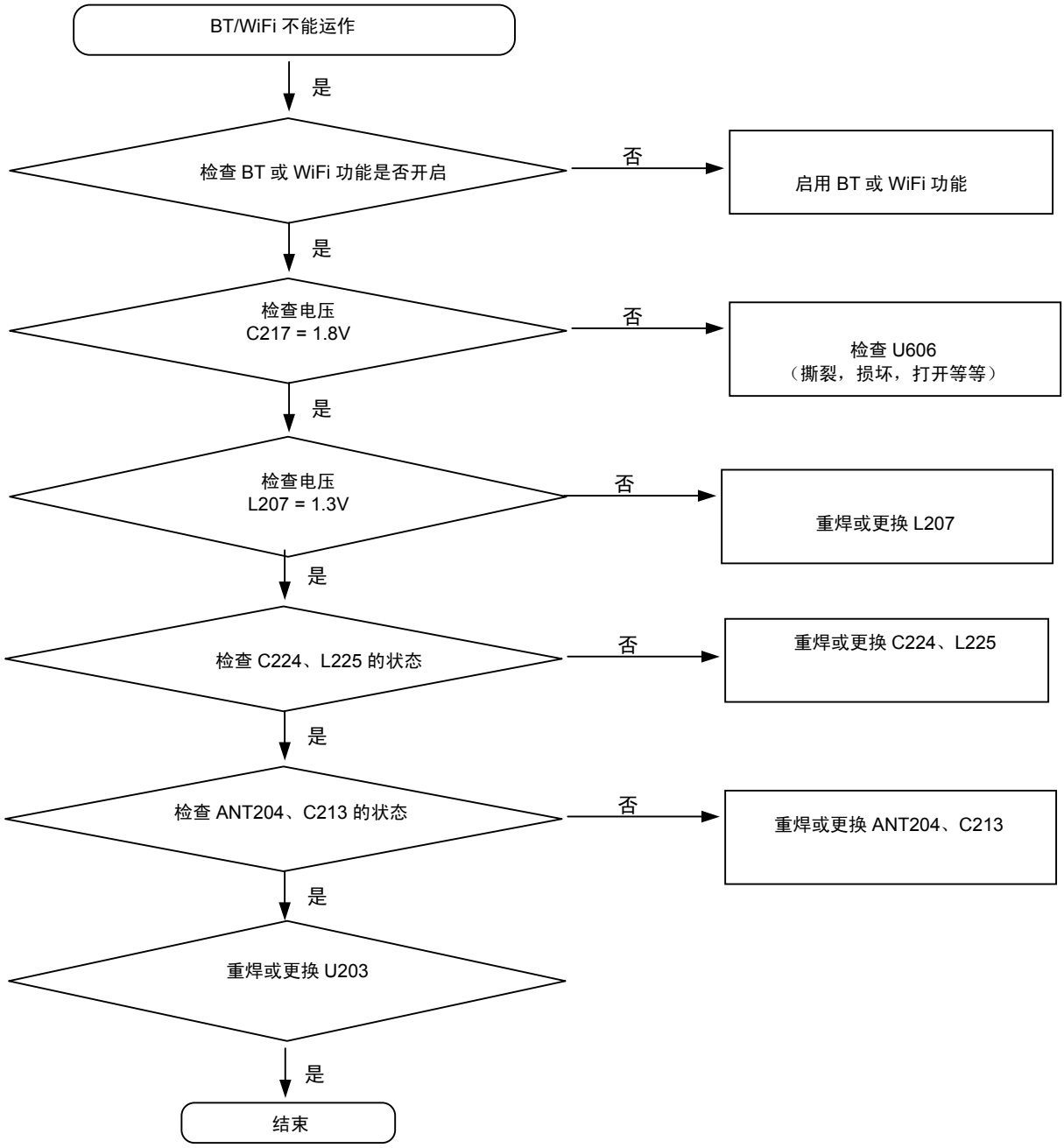

保密和所有权-本维修手册内容的变更恕不另行通知。
未经三星书面授权而发布，传送，或违背本文件中的任何内容或数据是严格禁止的。

BT/WIFI

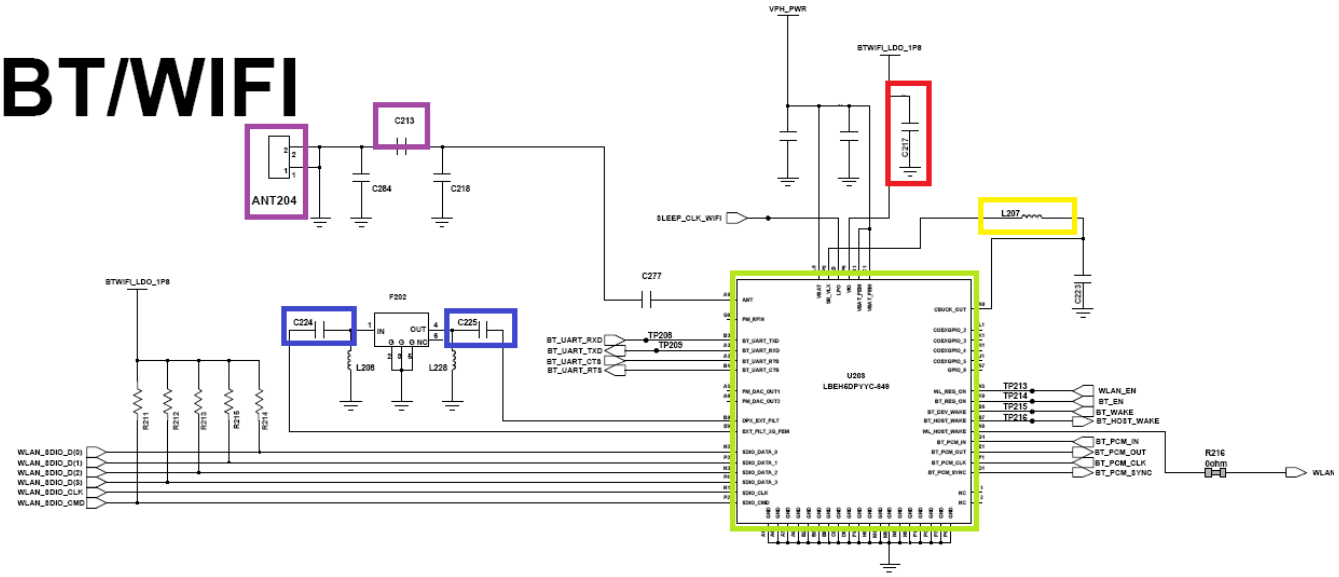

Confidential and proprietary-the contents in this service guide subject to change without prior notice.
Distribution, transmission, or infringement of any content or data from this document without Samsung's written authorization is strictly prohibited.

8-3-12.GPS

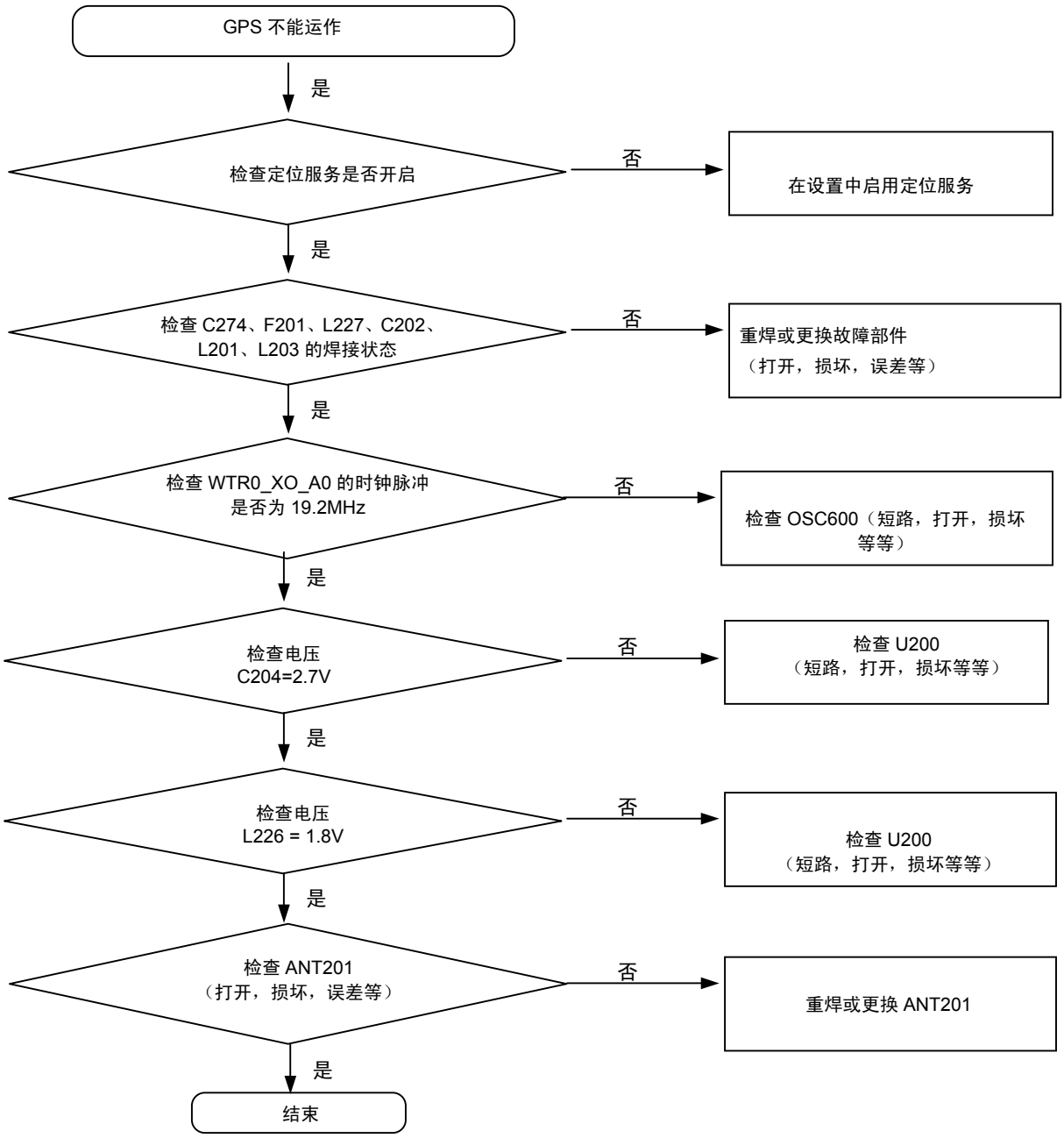

保密和所有权-本维修手册内容的变更恕不另行通知。
未经三星书面授权而发布，传送，或违背本文件中的任何内容或数据是严格禁止的。

GPS

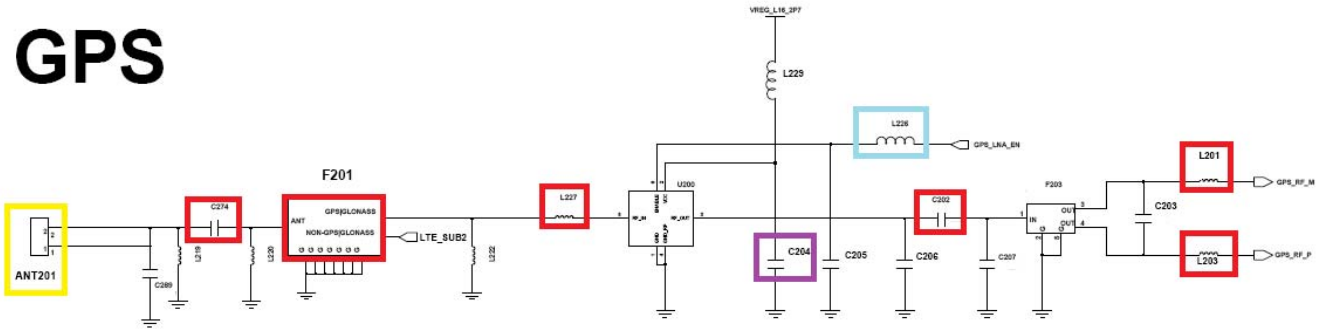

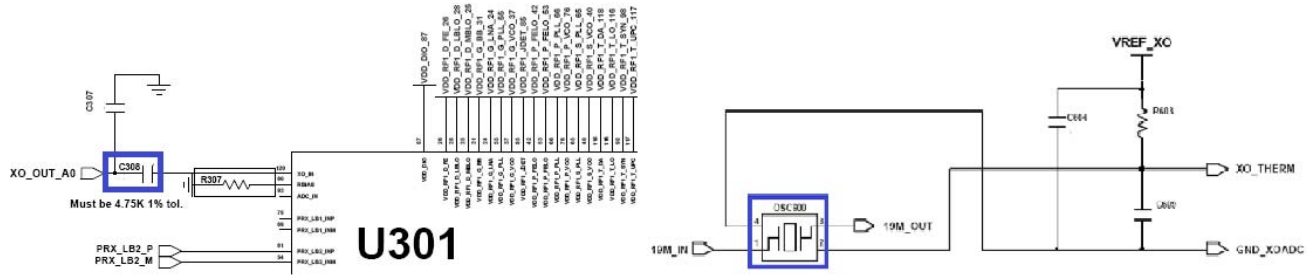

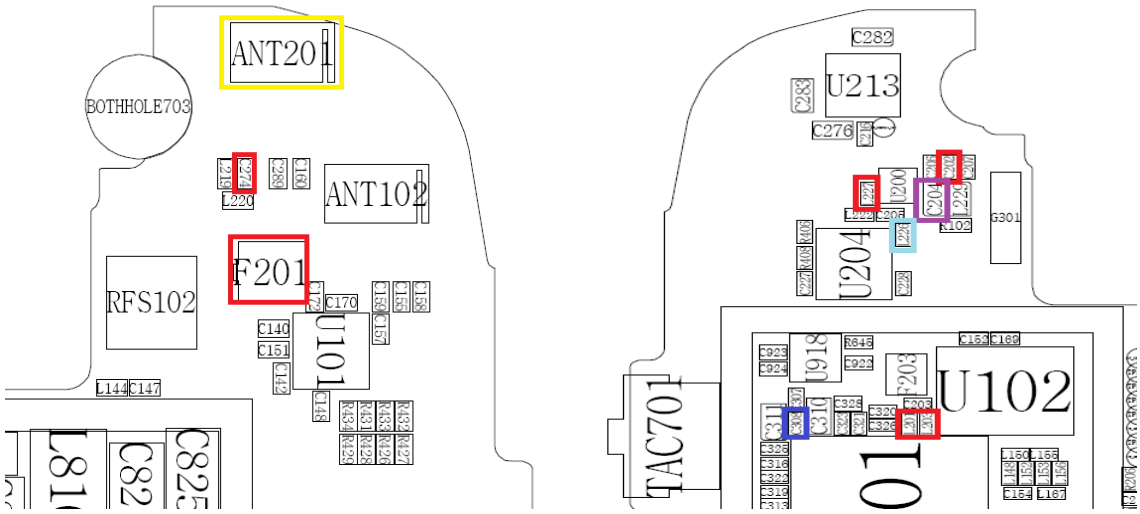

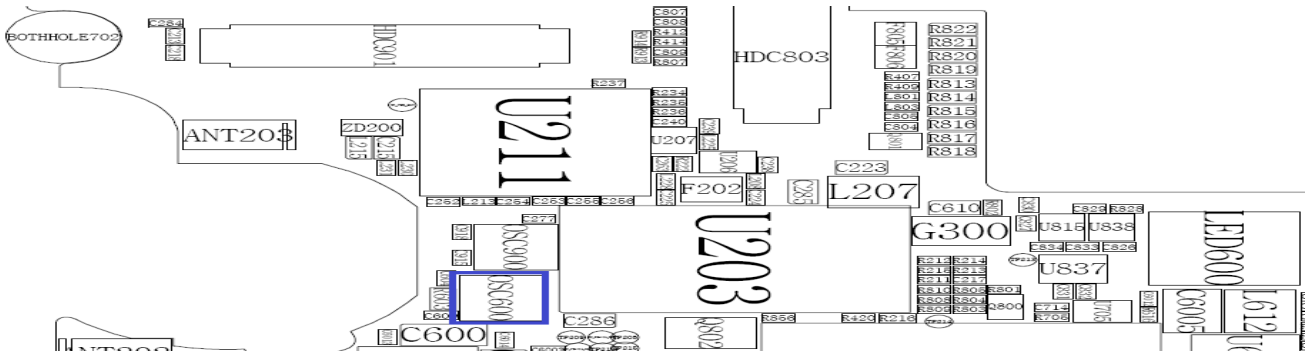

Confidential and proprietary-the contents in this service guide subject to change without prior notice.
Distribution, transmission, or infringement of any content or data from this document without Samsung's written authorization is strictly prohibited.

8-3-13.NFC/FeliCa

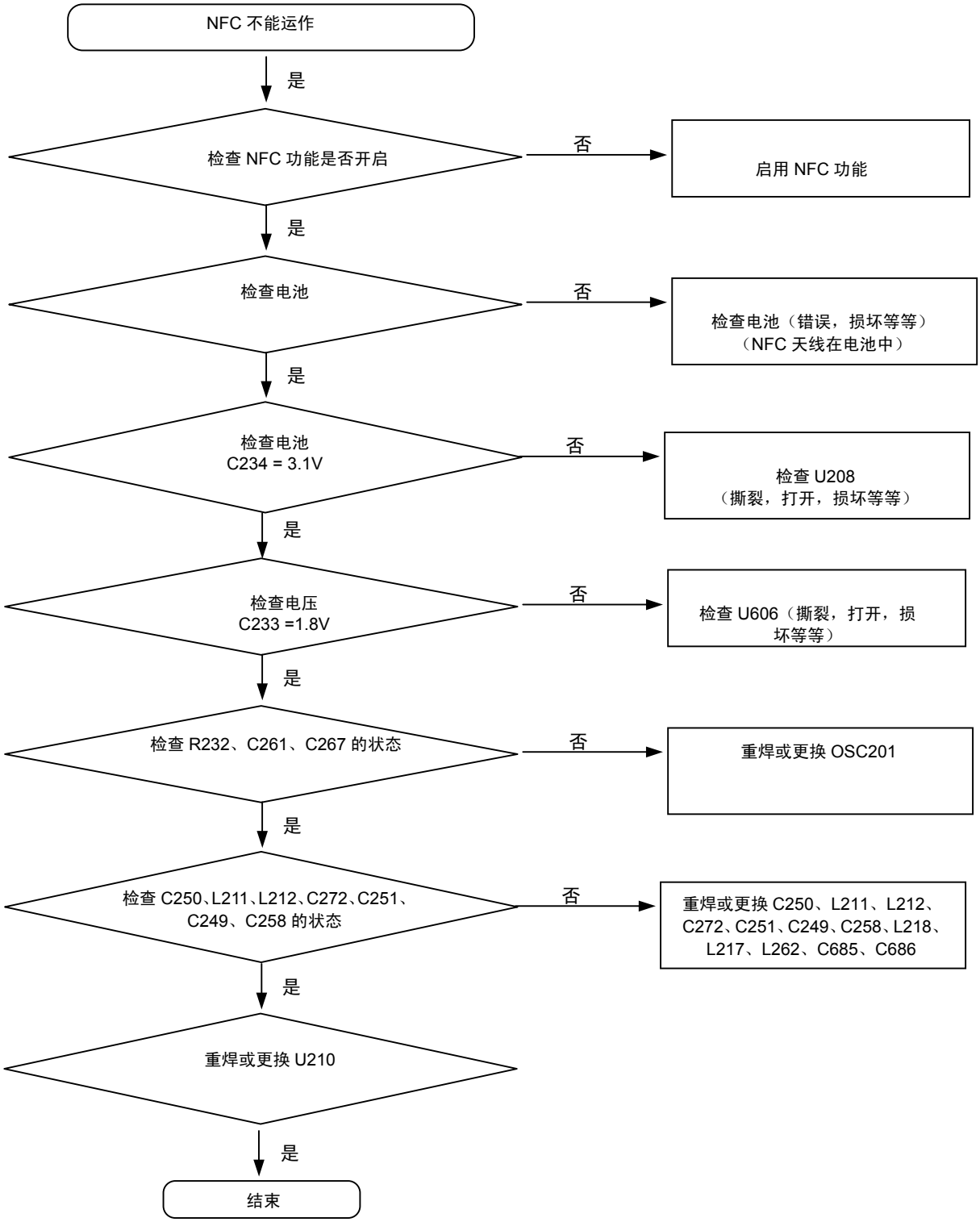

保密和所有权-本维修手册内容的变更恕不另行通知。
未经三星书面授权而发布，传送，或违背本文件中的任何内容或数据是严格禁止的。

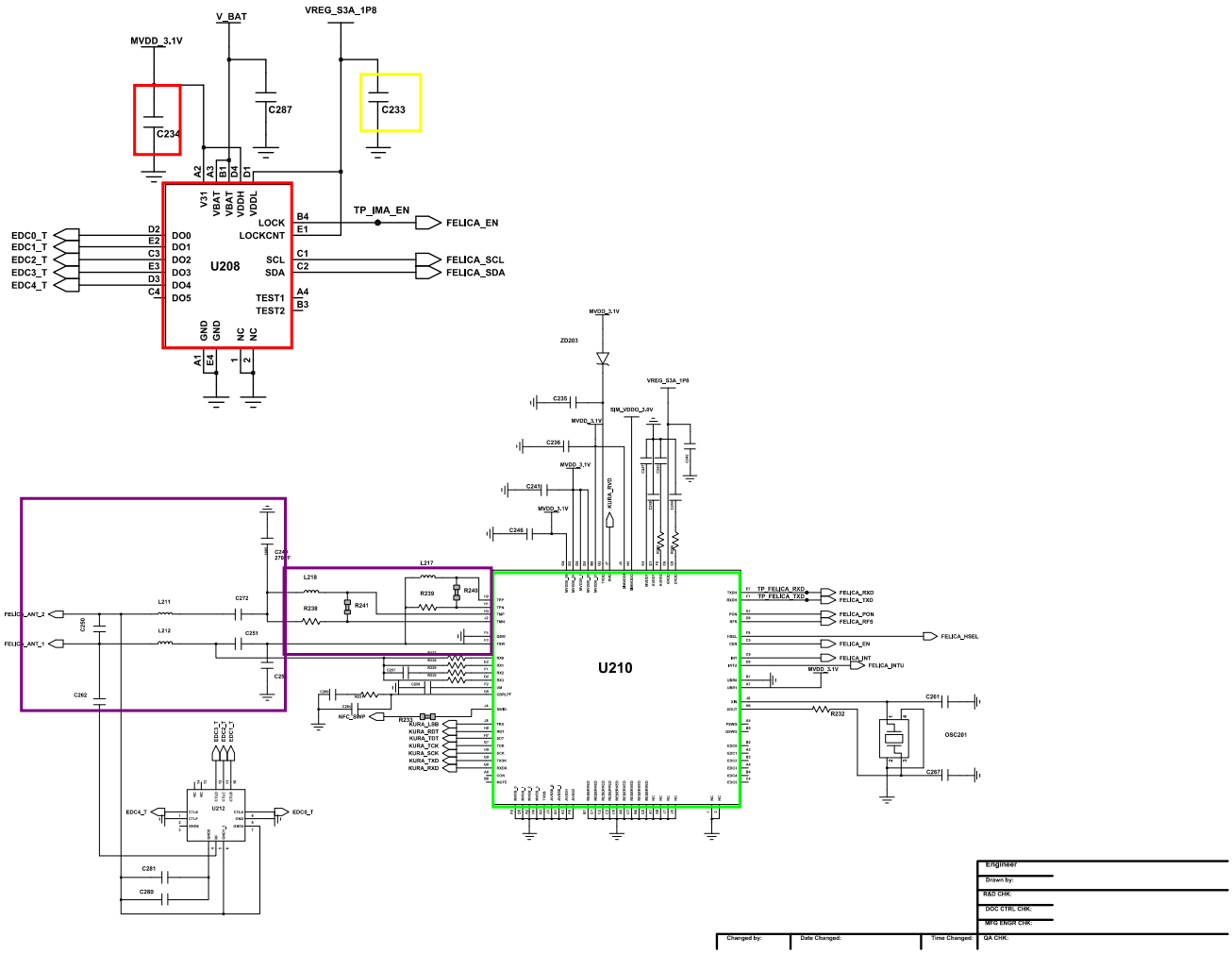

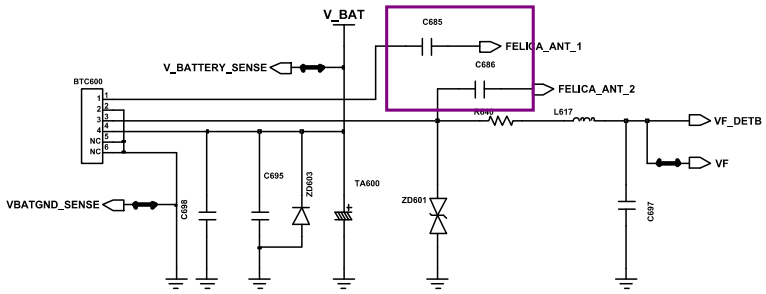

Confidential and proprietary-the contents in this service guide subject to change without prior notice.
Distribution, transmission, or infringement of any content or data from this document without Samsung's written authorization is strictly prohibited.

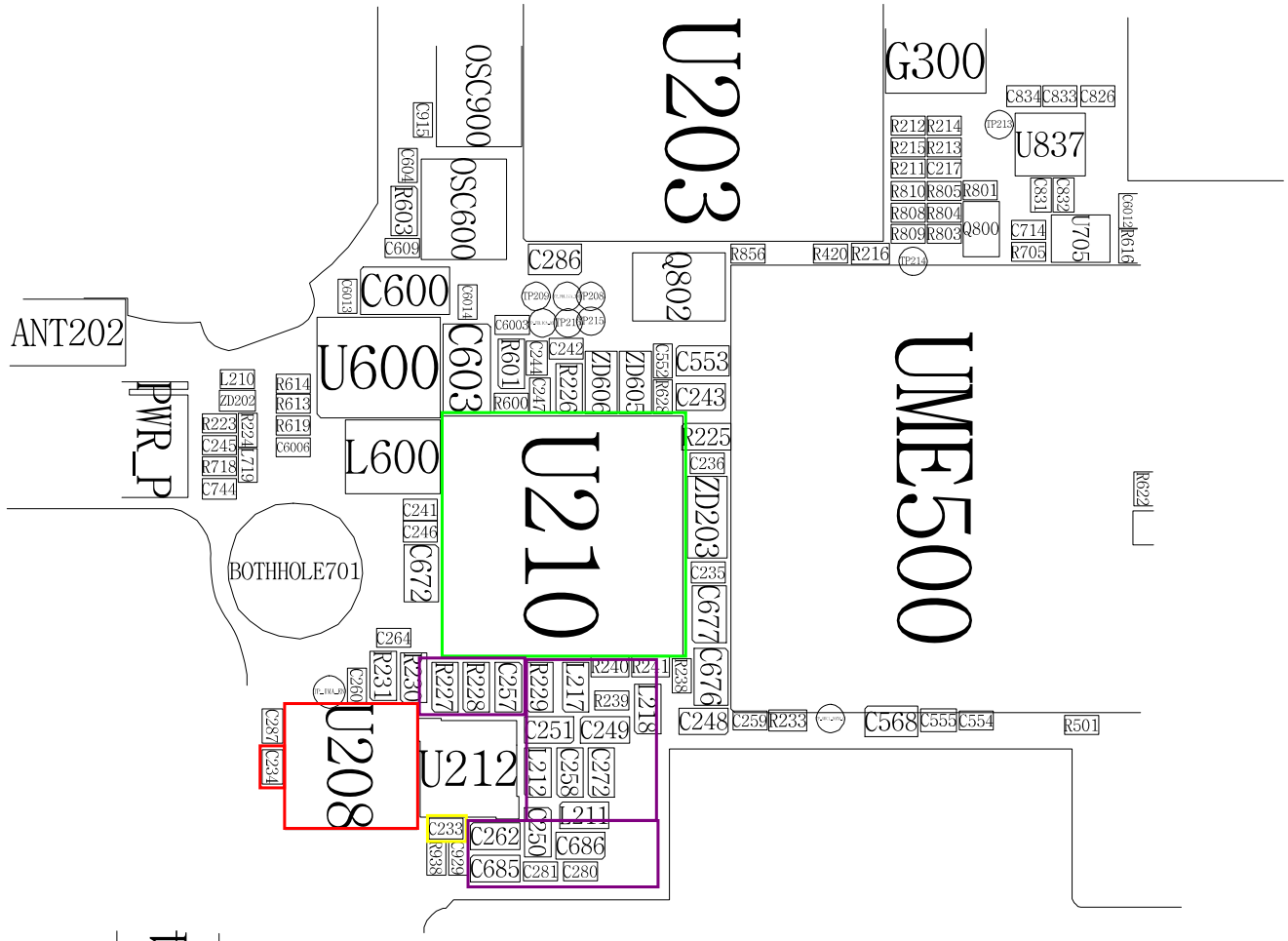

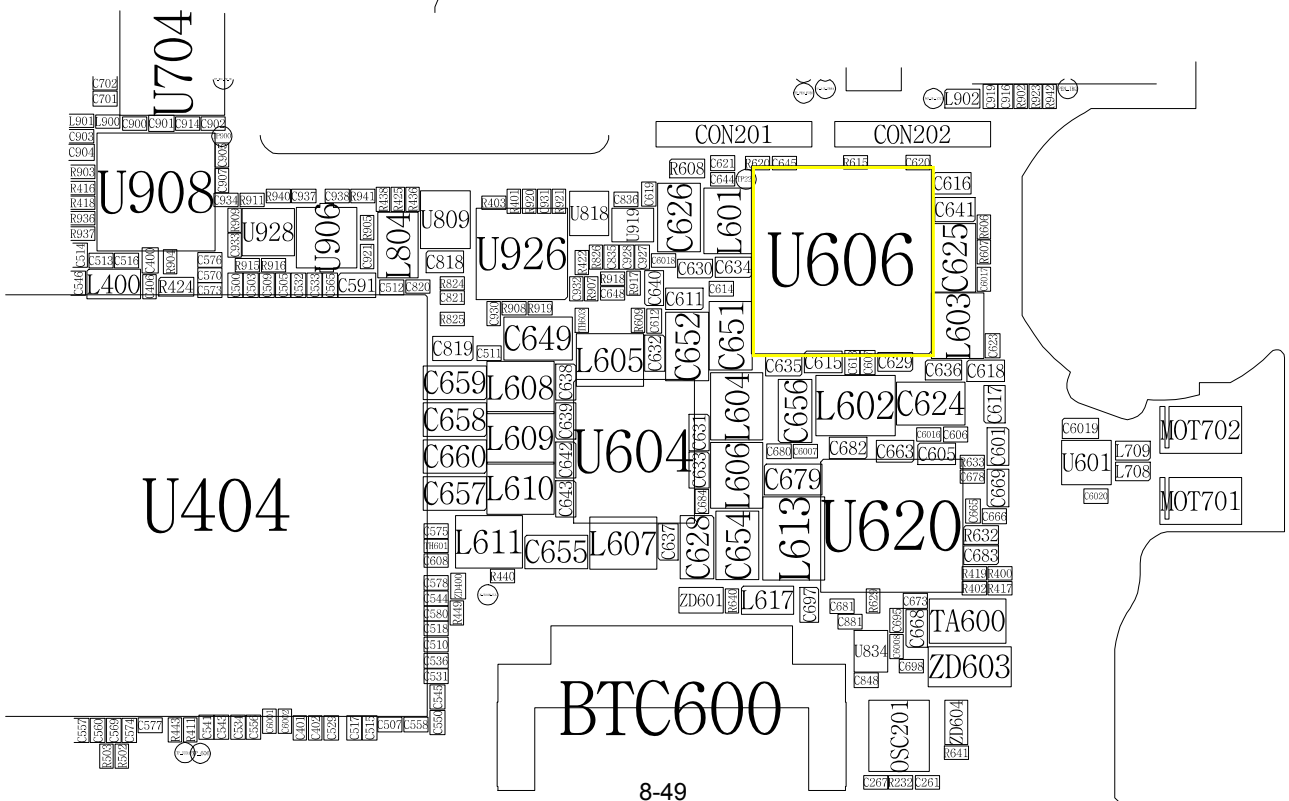

Confidential and proprietary-the contents in this service guide subject to change without prior notice.
Distribution, transmission, or infringement of any content or data from this document without Samsung's written authorization is strictly prohibited.

8-3-13-1.Nottv & OneSeg

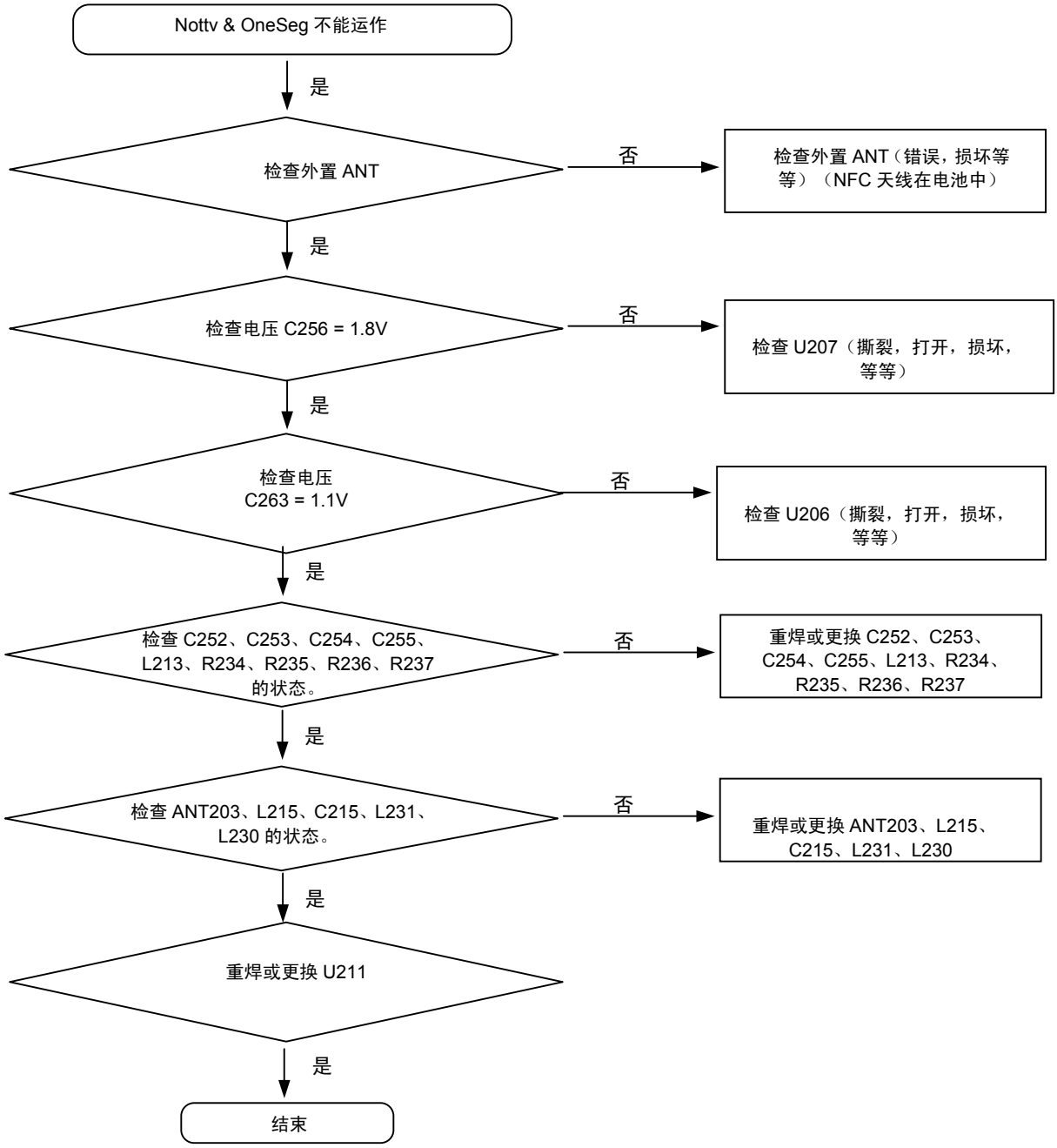

保密和所有权-本维修手册内容的变更恕不另行通知。
未经三星书面授权而发布，传送，或违背本文件中的任何内容或数据是严格禁止的。

TMM PART

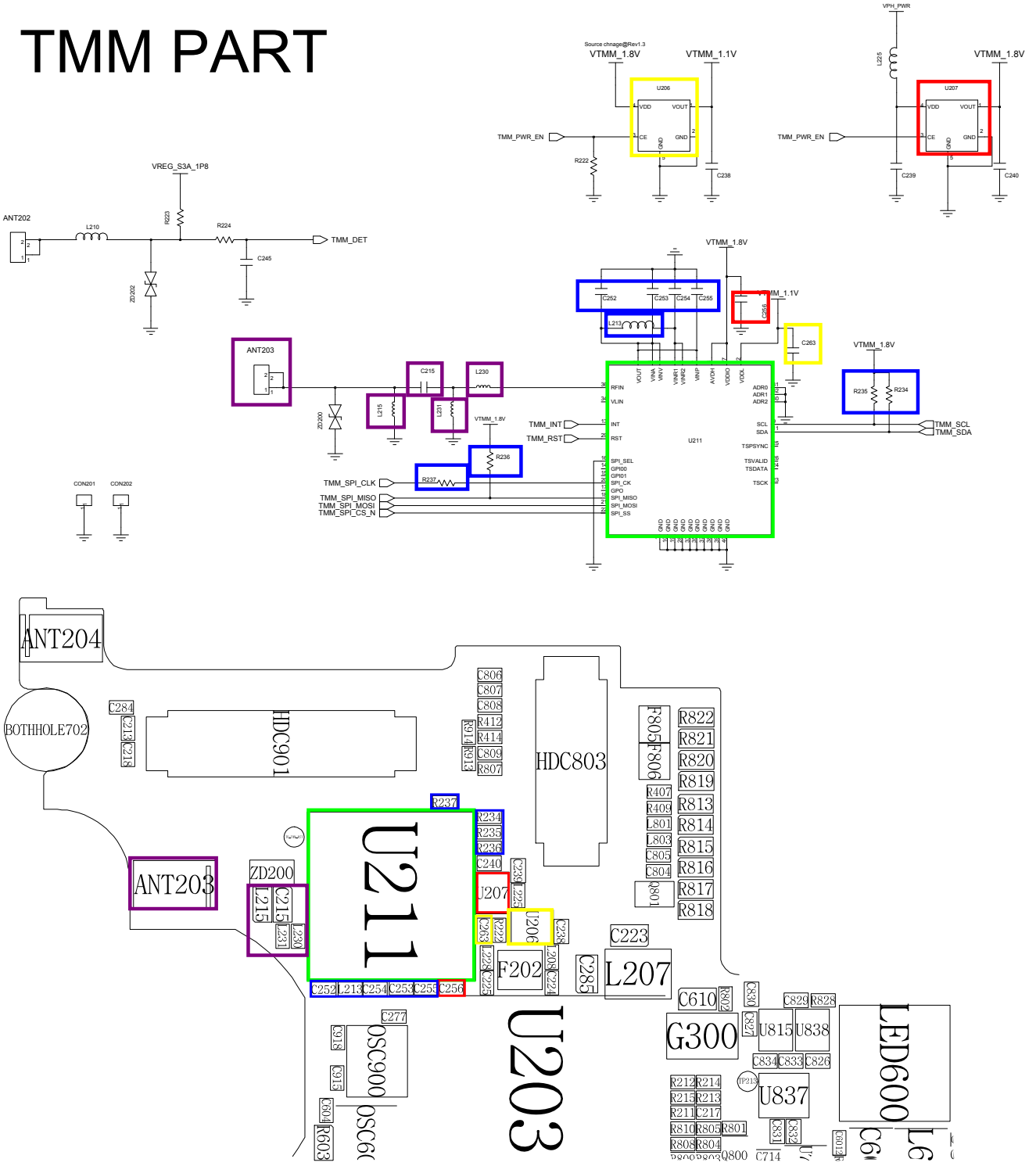

Confidential and proprietary-the contents in this service guide subject to change without prior notice.
Distribution, transmission, or infringement of any content or data from this document without Samsung's written authorization is strictly prohibited.

8-3-14.液晶显示屏

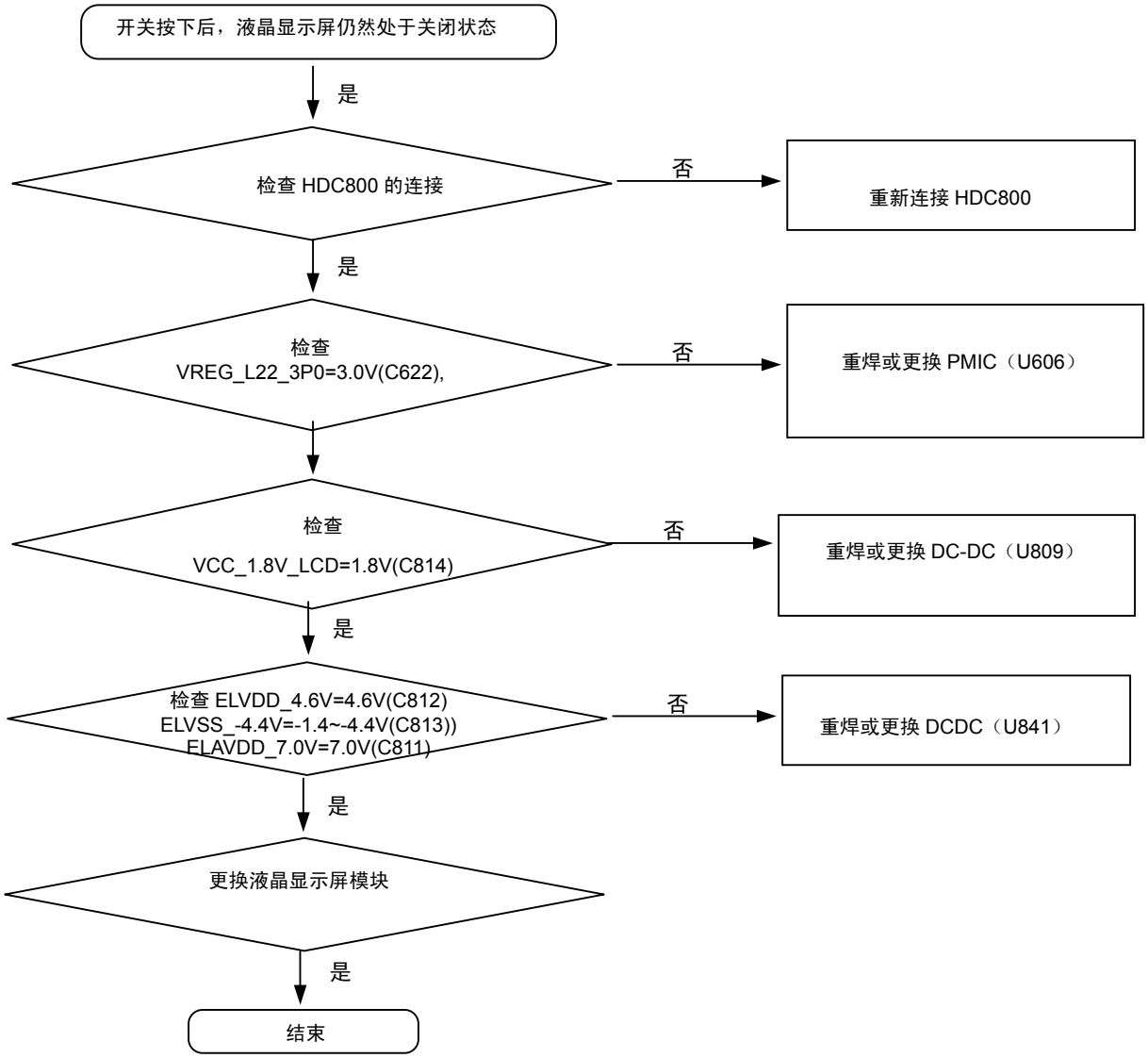

保密和所有权-本维修手册内容的变更恕不另行通知。
未经三星书面授权而发布，传送，或违背本文件中的任何内容或数据是严格禁止的。

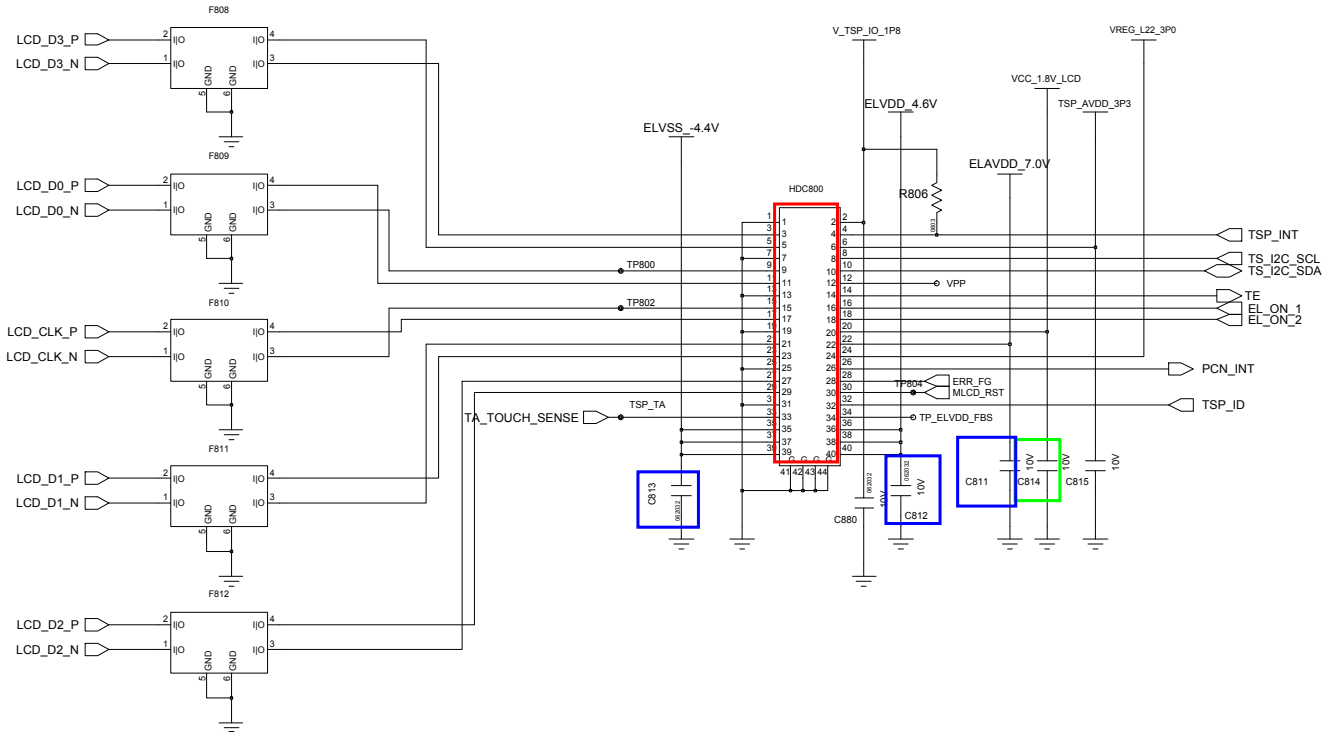

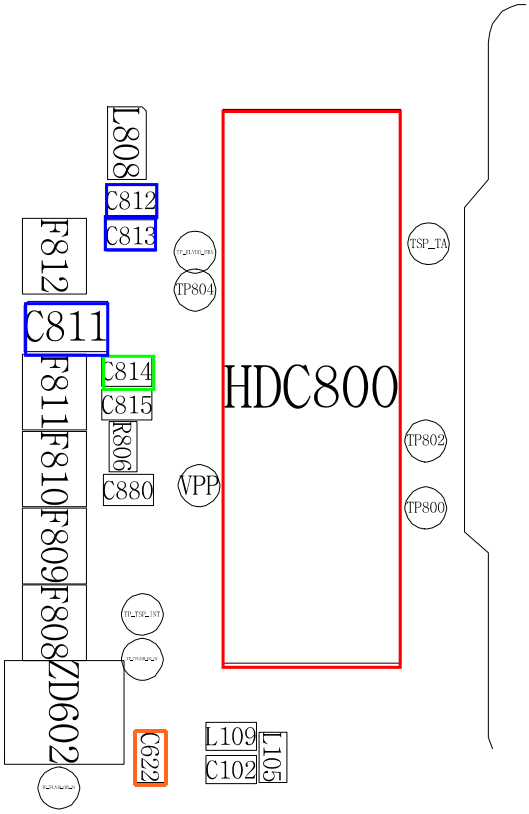

Confidential and proprietary-the contents in this service guide subject to change without prior notice.
Distribution, transmission, or infringement of any content or data from this document without Samsung's written authorization is strictly prohibited.

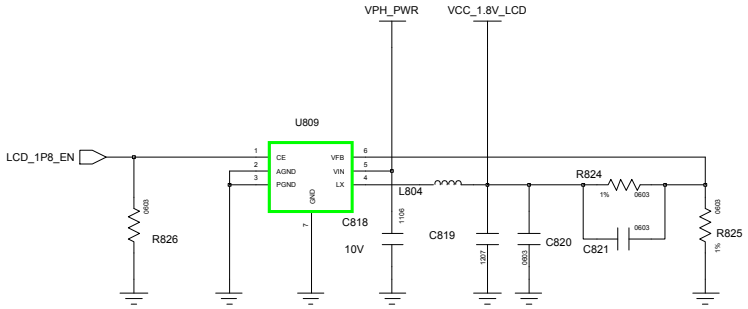

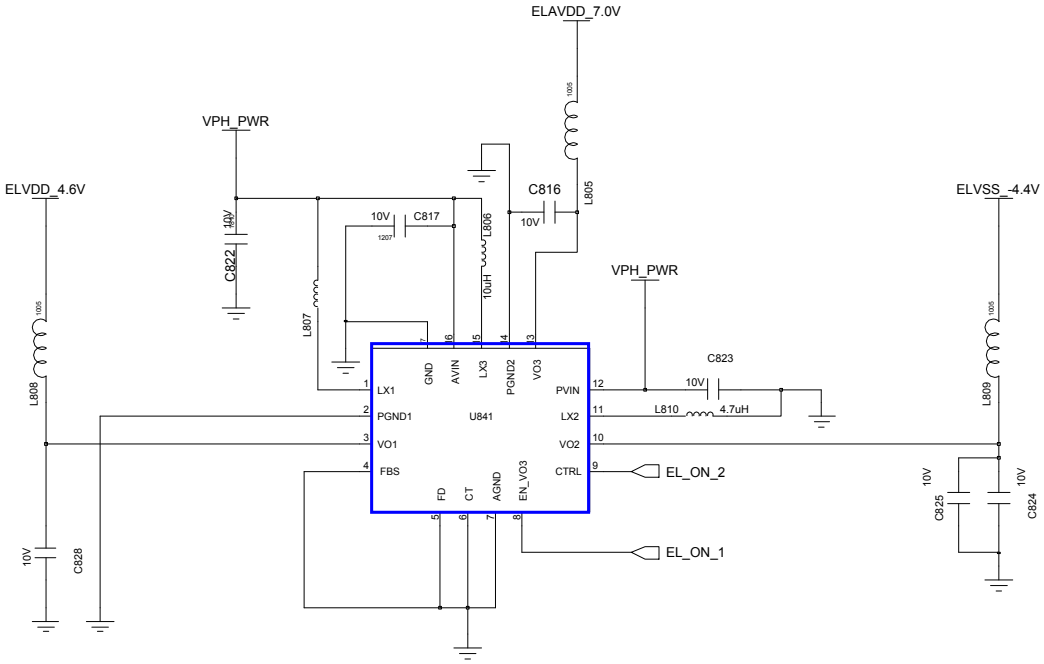

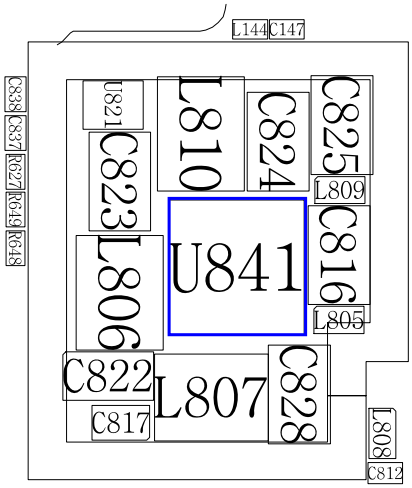

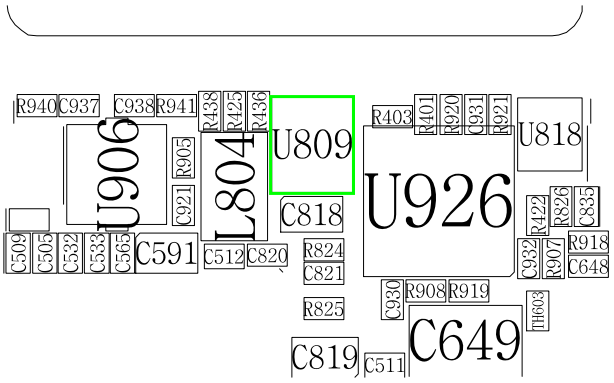

Confidential and proprietary-the contents in this service guide subject to change without prior notice.
Distribution, transmission, or infringement of any content or data from this document without Samsung's written authorization is strictly prohibited.

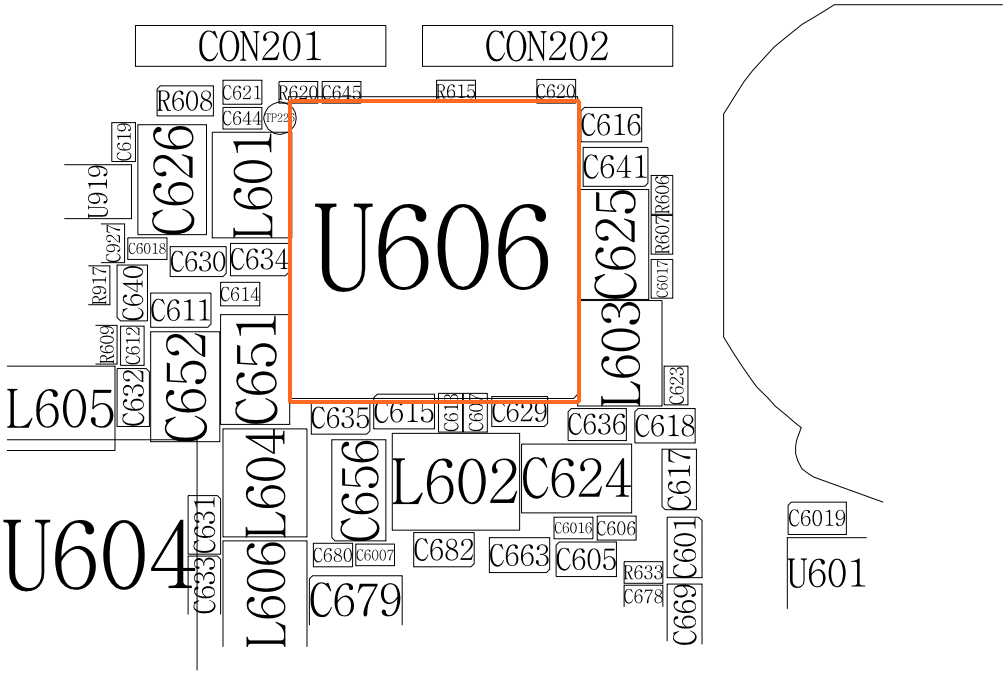

保密和所有权-本维修手册内容的变更恕不另行通知。
未经三星书面授权而发布，传送，或违背本文件中的任何内容或数据是严格禁止的。

8-3-15.13M 摄像头

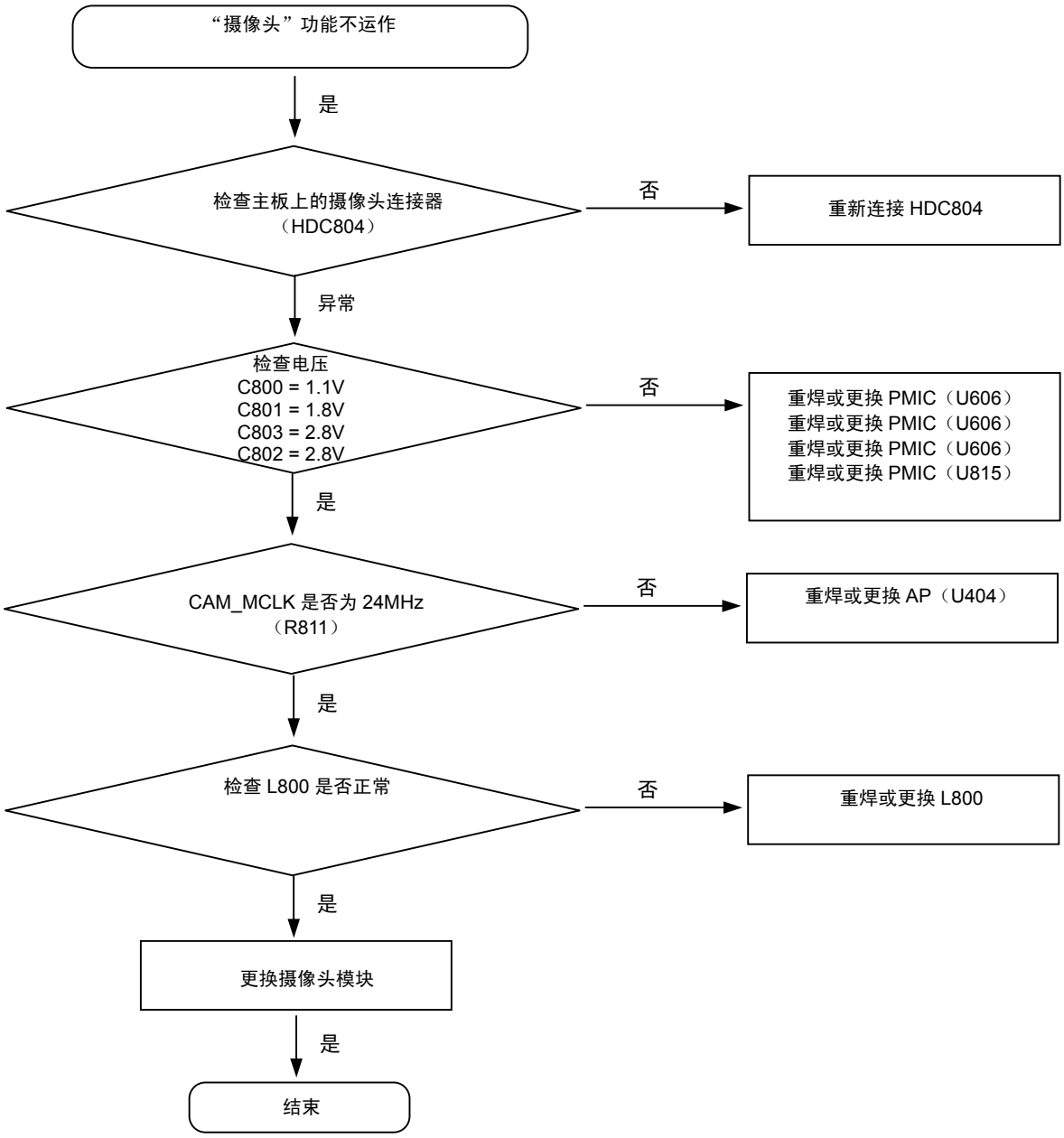

保密和所有权-本维修手册内容的变更恕不另行通知。
未经三星书面授权而发布，传送，或违背本文件中的任何内容或数据是严格禁止的。

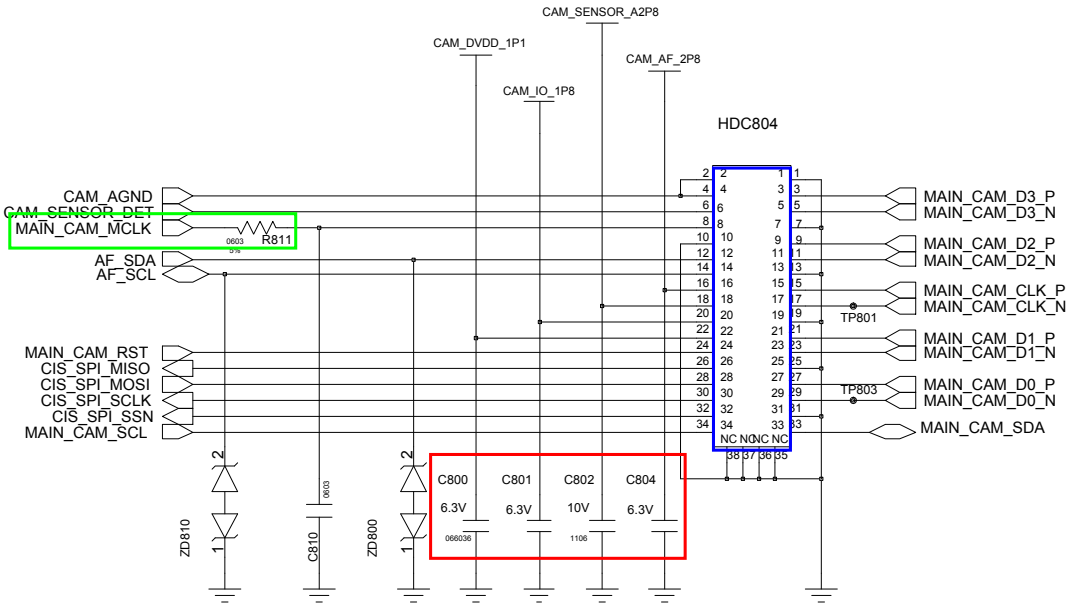

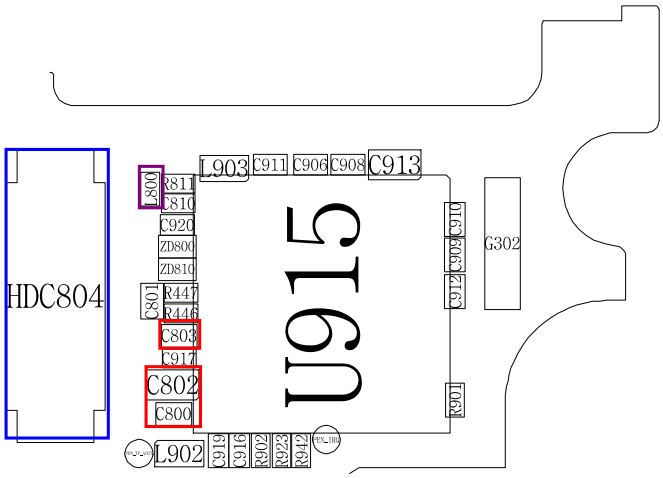

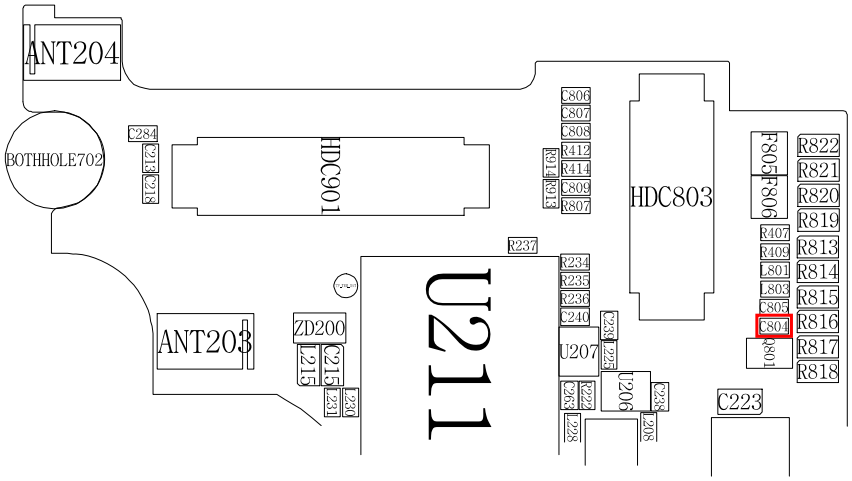

Confidential and proprietary-the contents in this service guide subject to change without prior notice.
Distribution, transmission, or infringement of any content or data from this document without Samsung's written authorization is strictly prohibited.

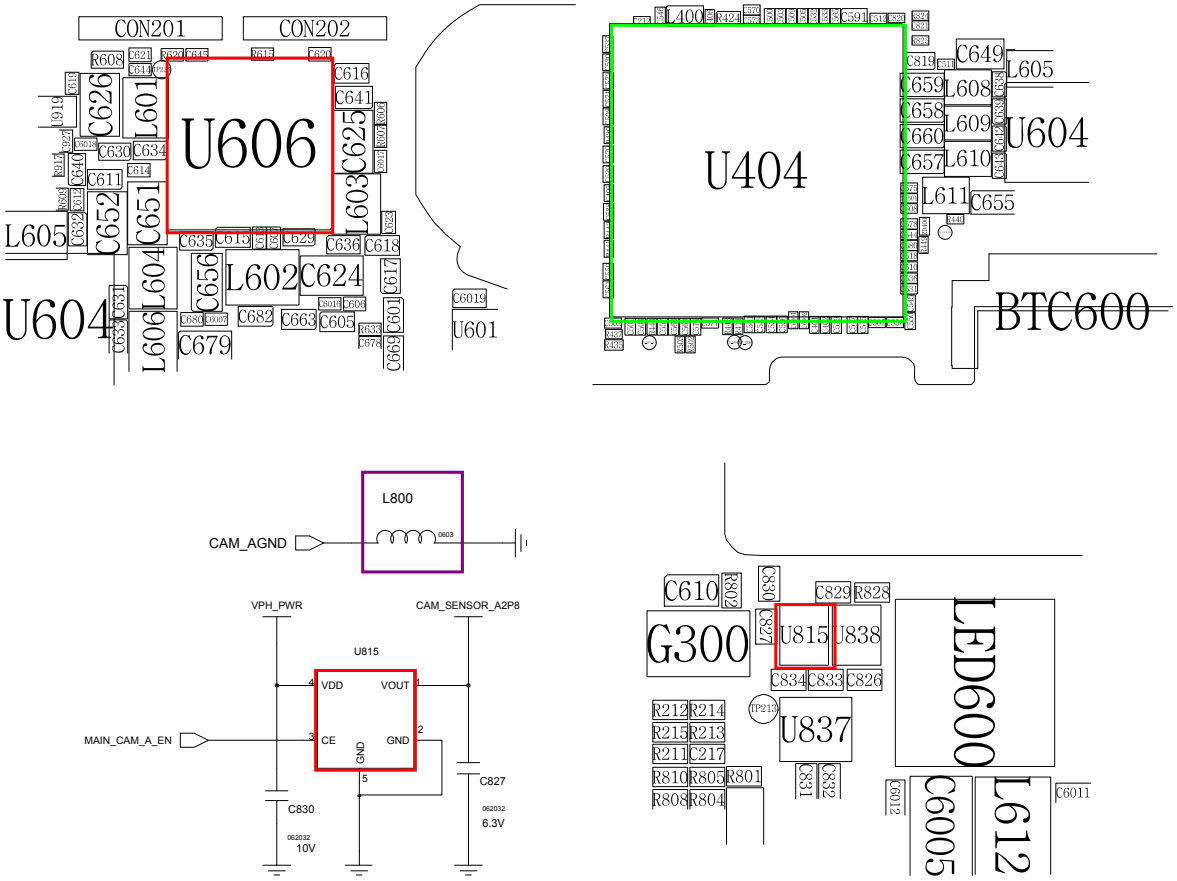

保密和所有权-本维修手册内容的变更恕不另行通知。
未经三星书面授权而发布，传送，或违背本文件中的任何内容或数据是严格禁止的。

8-3-16.VT 摄像头

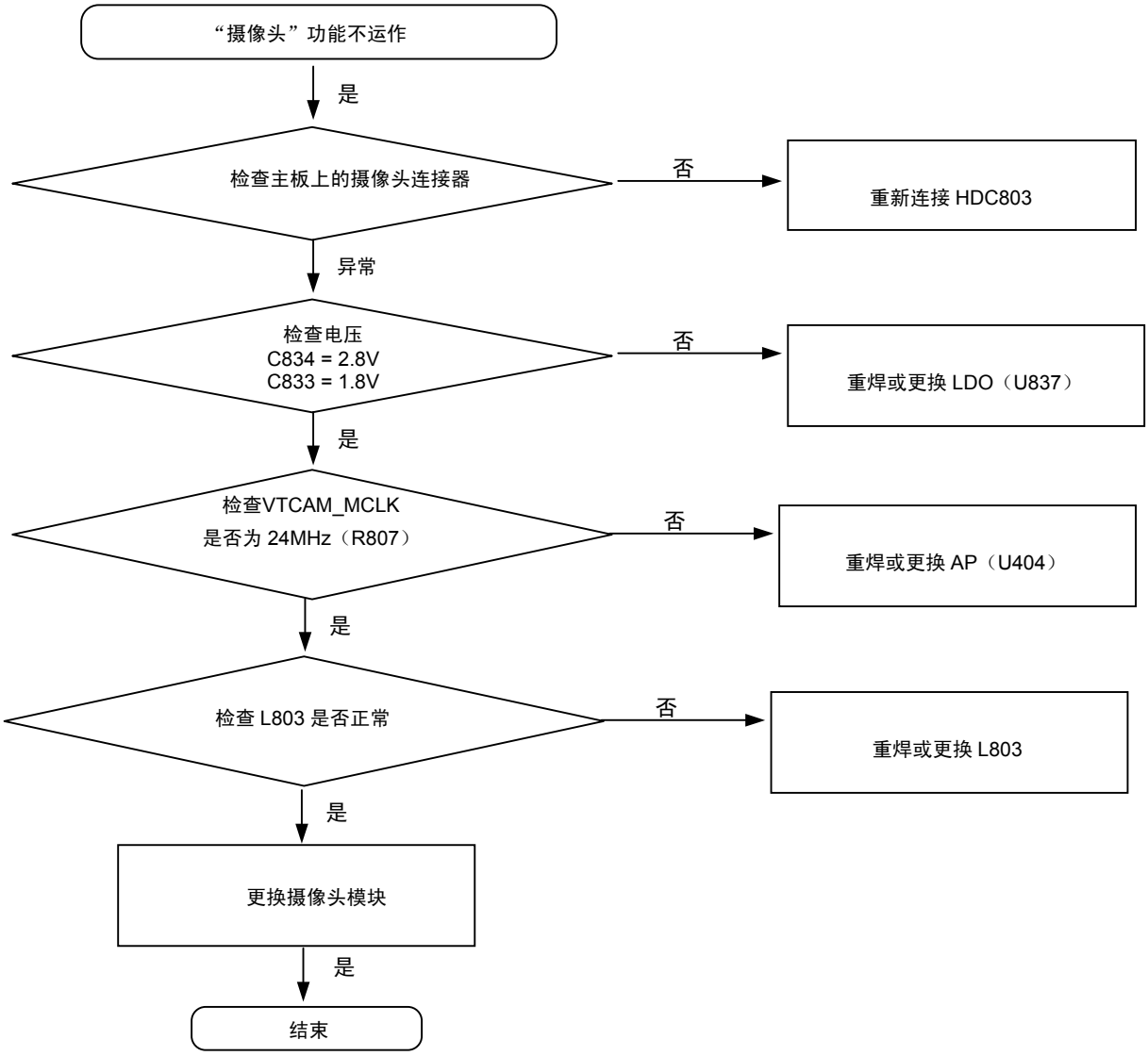

保密和所有权-本维修手册内容的变更恕不另行通知。
未经三星书面授权而发布，传送，或违背本文件中的任何内容或数据是严格禁止的。

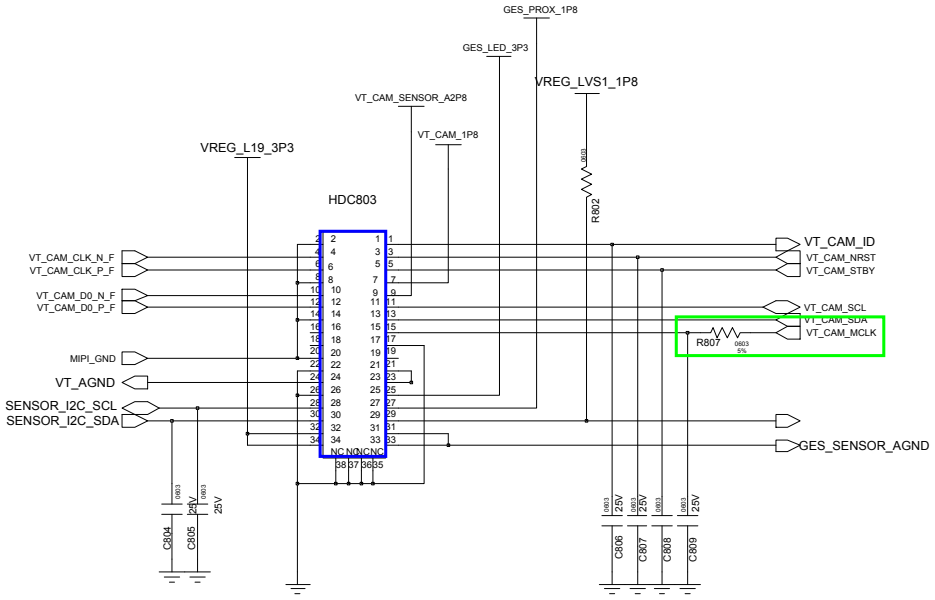

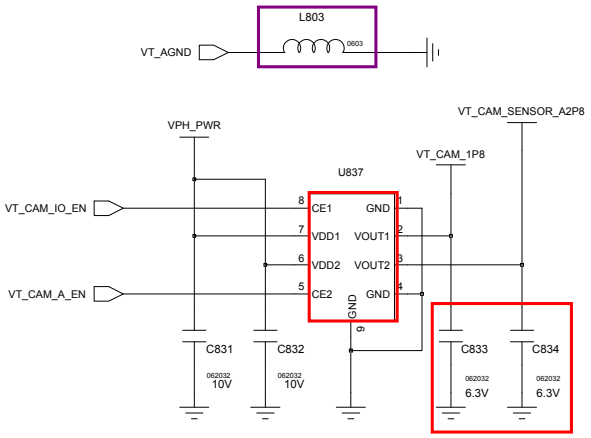

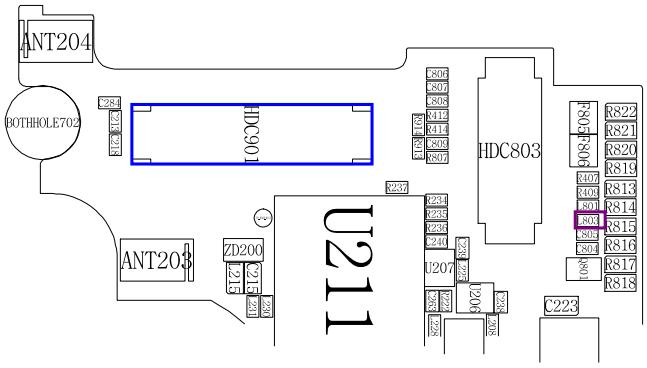

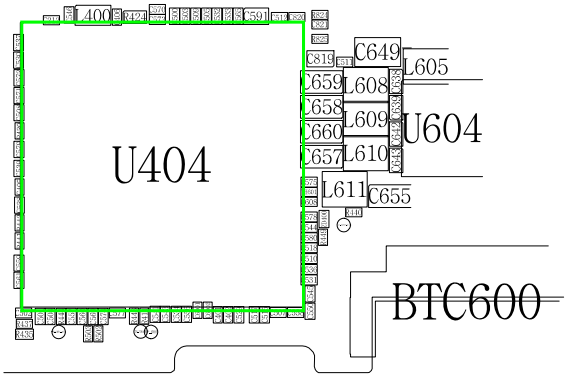

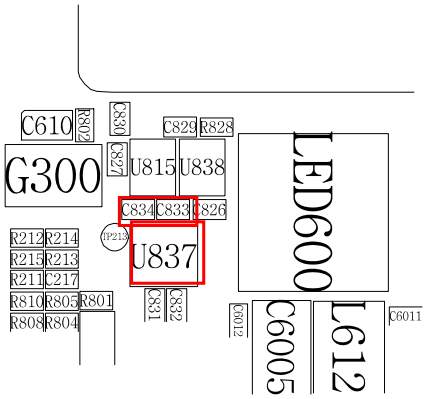

Confidential and proprietary-the contents in this service guide subject to change without prior notice.
Distribution, transmission, or infringement of any content or data from this document without Samsung's written authorization is strictly prohibited.

8-3-17.MHL

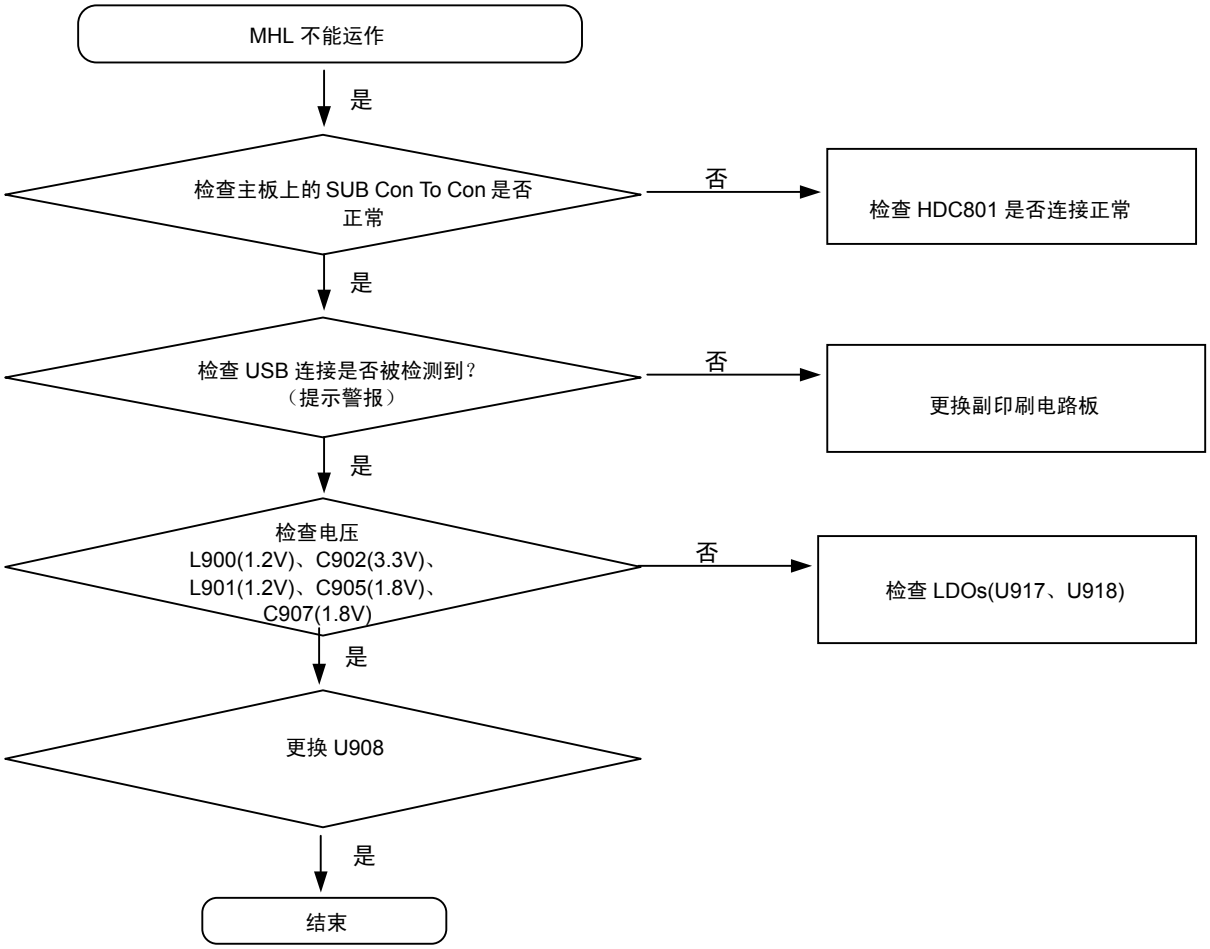

保密和所有权-本维修手册内容的变更恕不另行通知。
未经三星书面授权而发布，传送，或违背本文件中的任何内容或数据是严格禁止的。

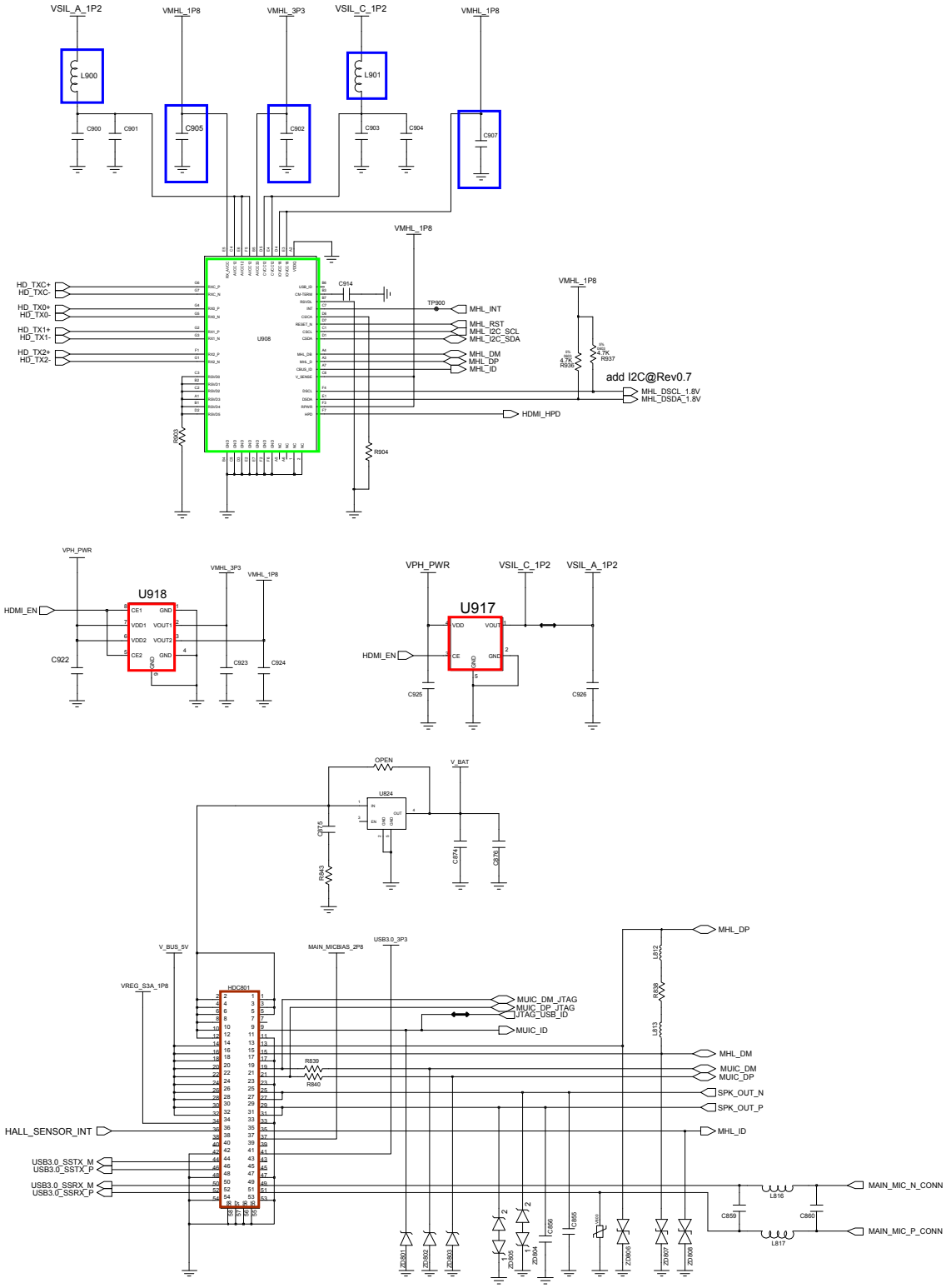

Confidential and proprietary-the contents in this service guide subject to change without prior notice.
Distribution, transmission, or infringement of any content or data from this document without Samsung's written authorization is strictly prohibited.

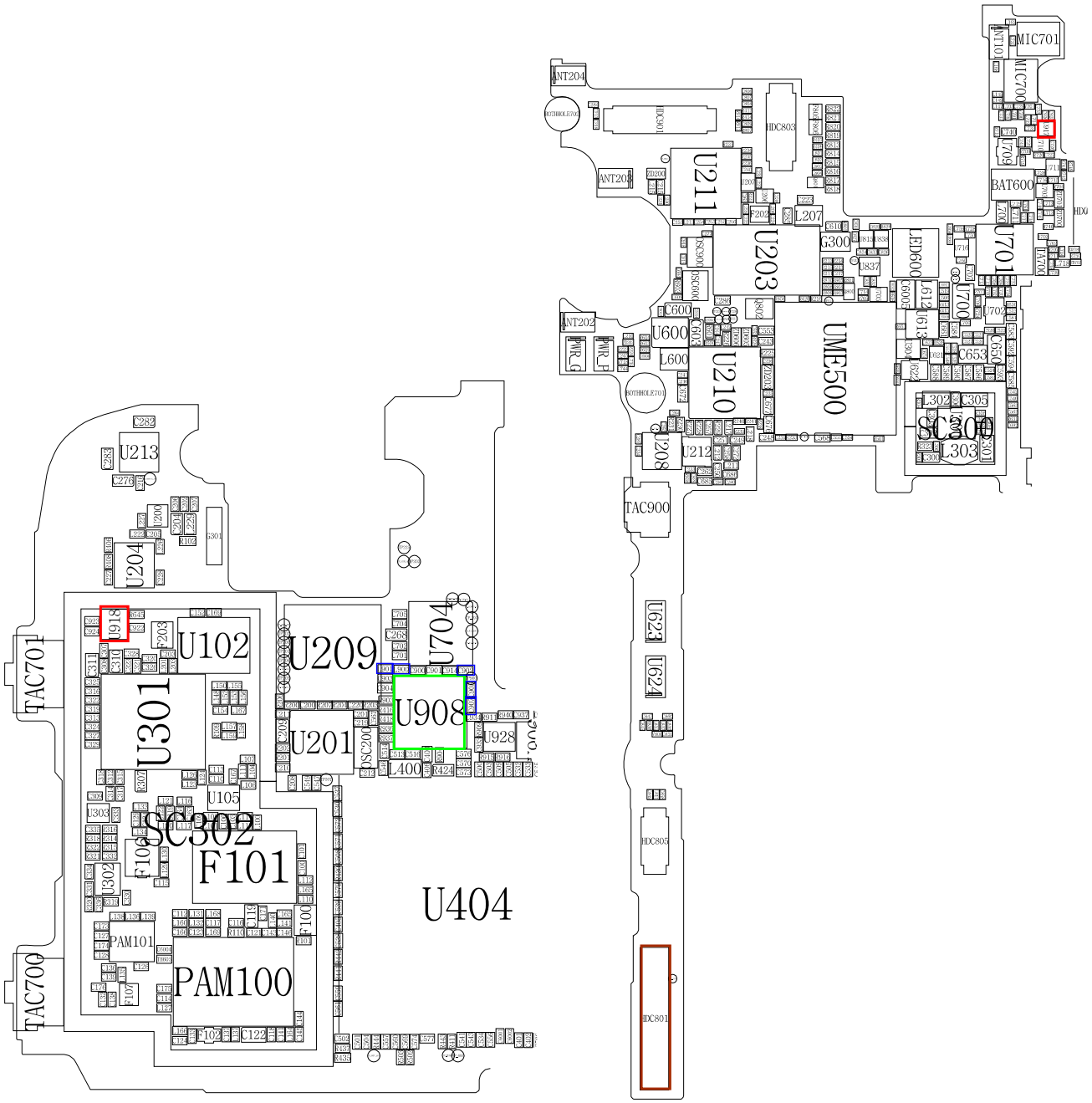

Confidential and proprietary-the contents in this service guide subject to change without prior notice.
Distribution, transmission, or infringement of any content or data from this document without Samsung's written authorization is strictly prohibited.

8-3-18.TSP

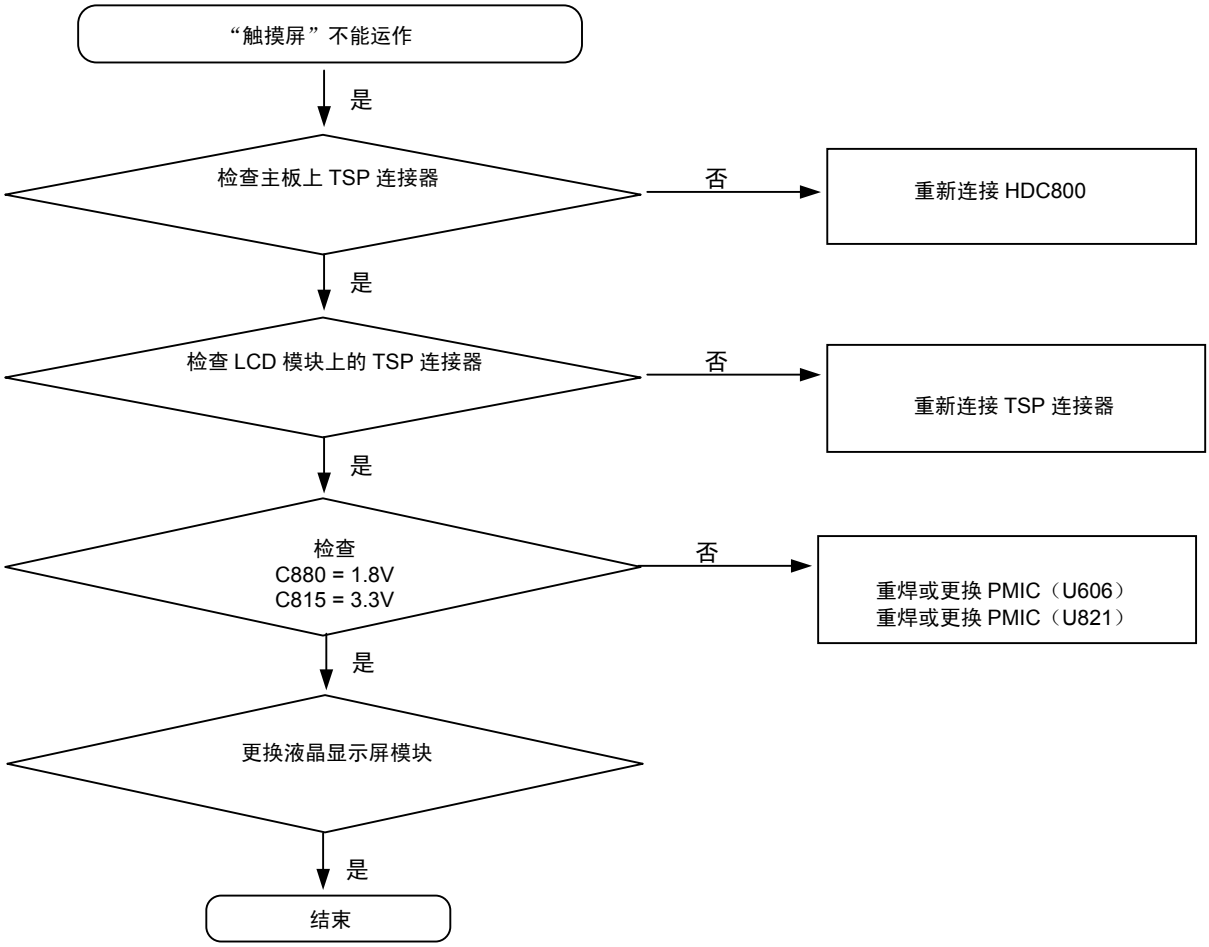

保密和所有权-本维修手册内容的变更恕不另行通知。
未经三星书面授权而发布，传送，或违背本文件中的任何内容或数据是严格禁止的。

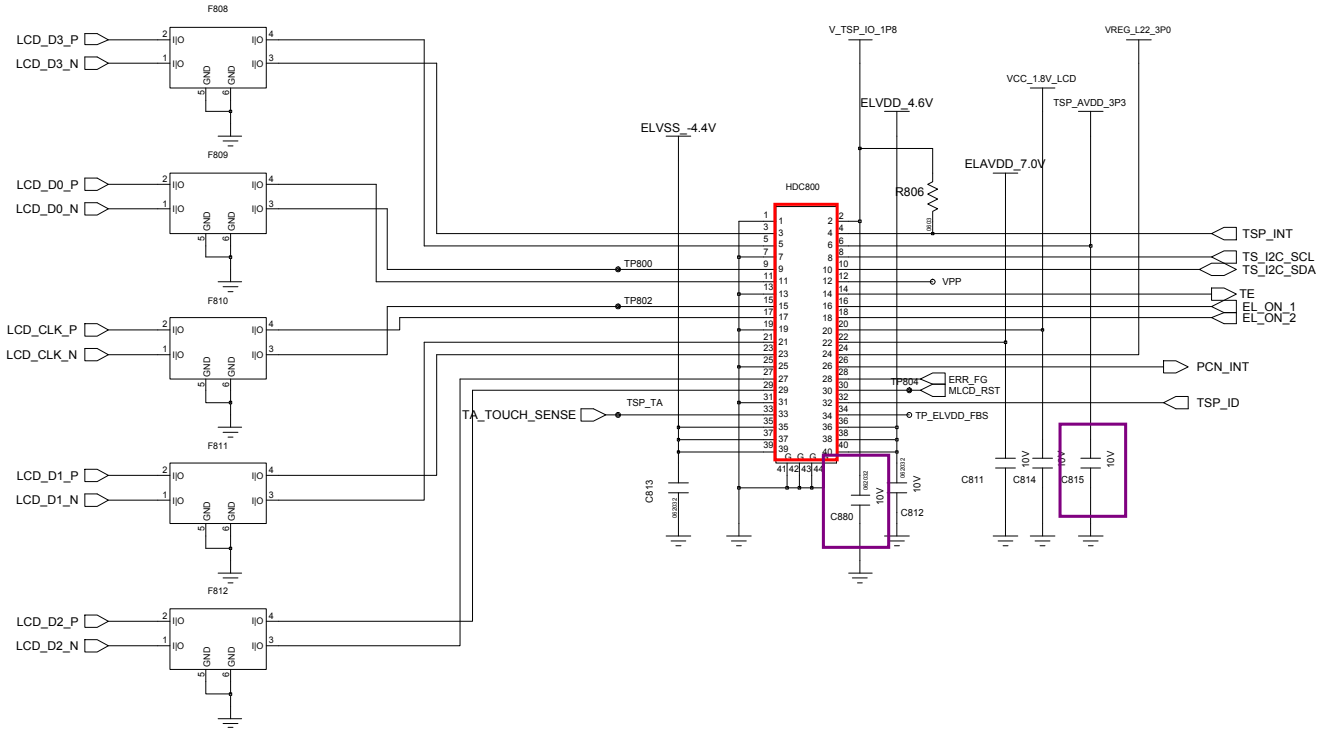

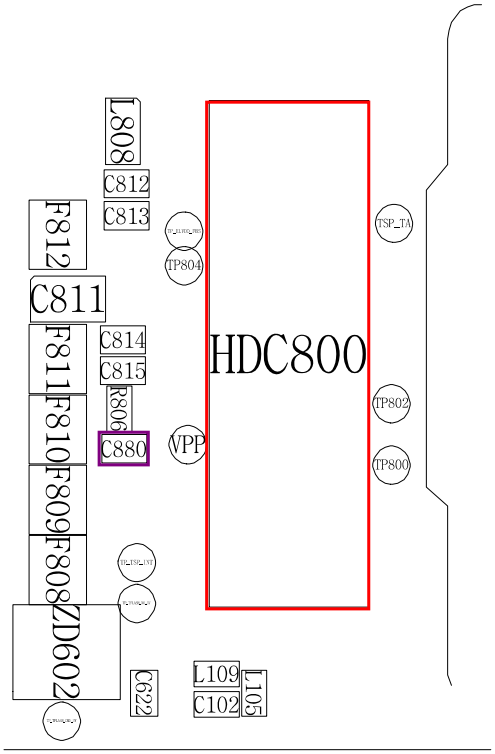

Confidential and proprietary-the contents in this service guide subject to change without prior notice.
Distribution, transmission, or infringement of any content or data from this document without Samsung's written authorization is strictly prohibited.

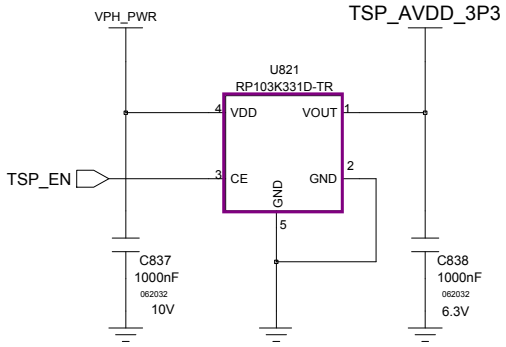

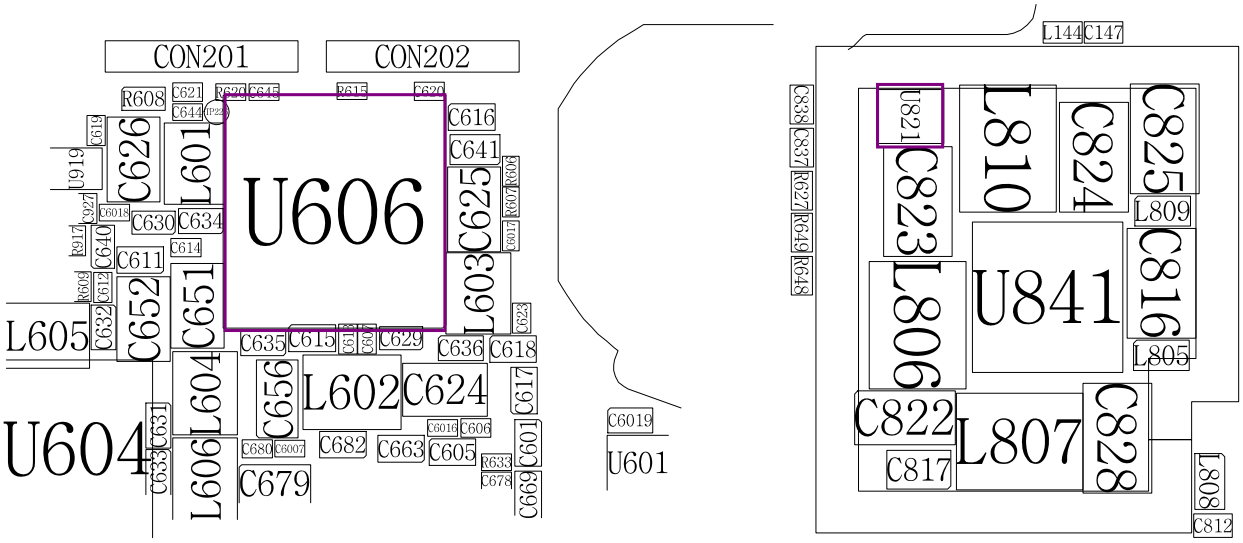

保密和所有权-本维修手册内容的变更恕不另行通知。
未经三星书面授权而发布，传送，或违背本文件中的任何内容或数据是严格禁止的。

8-3-19.IRLED

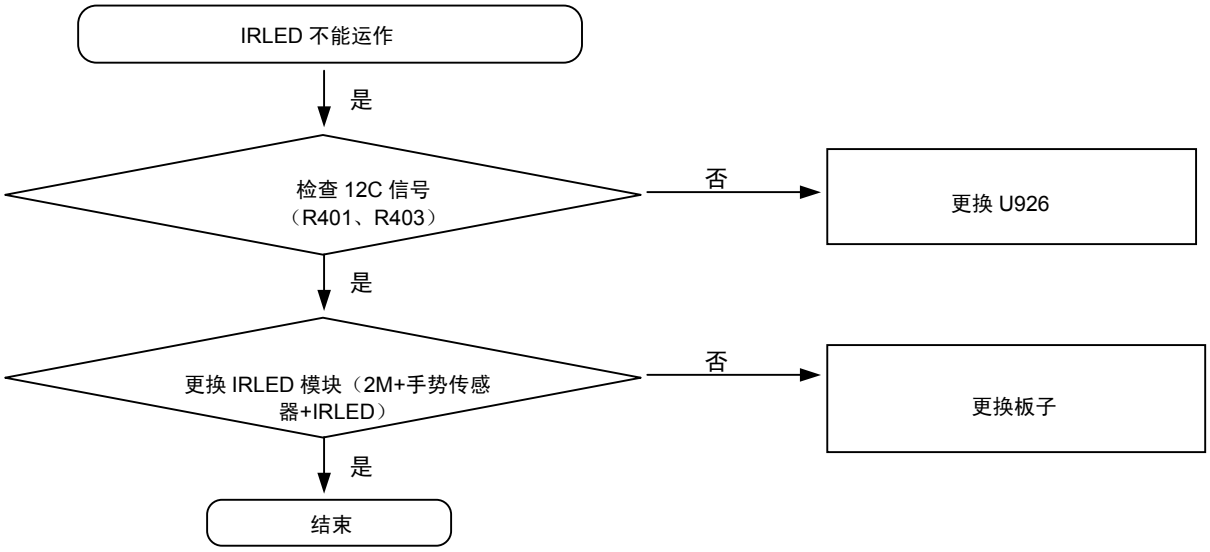

保密和所有权-本维修手册内容的变更恕不另行通知。
未经三星书面授权而发布，传送，或违背本文件中的任何内容或数据是严格禁止的。

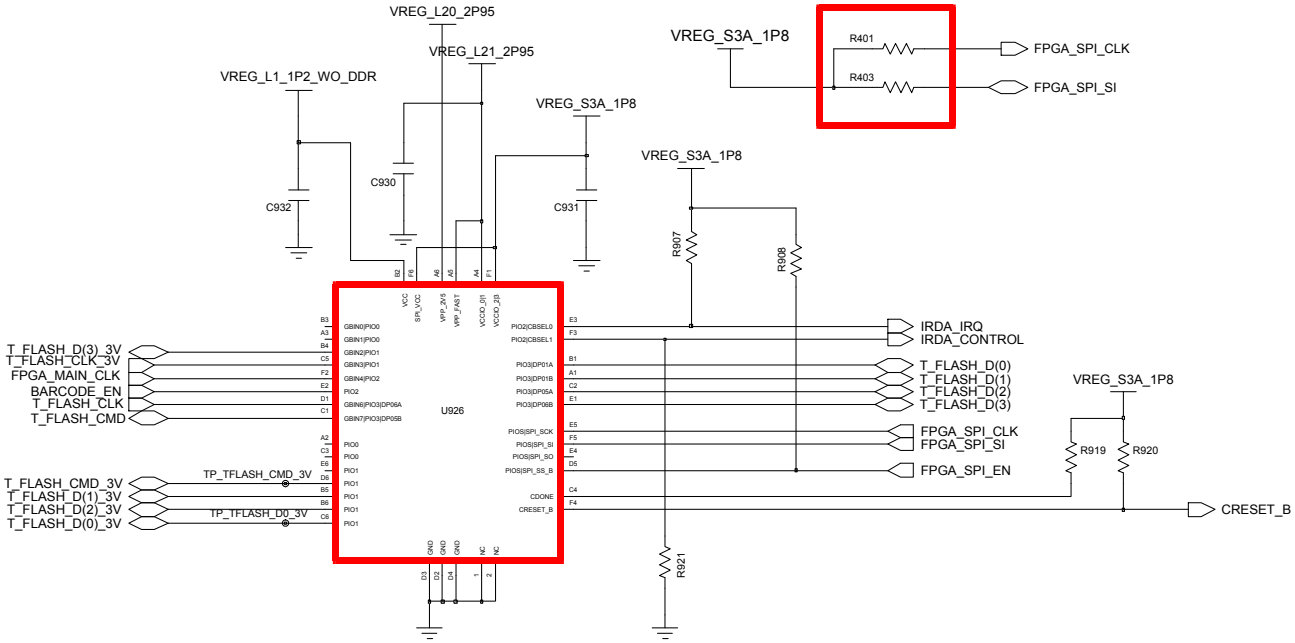

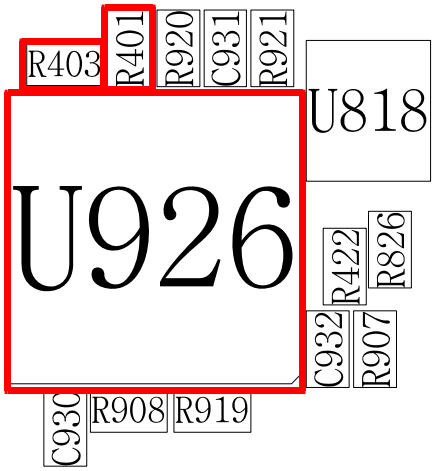

保密和所有权-本维修手册内容的变更恕不另行通知。
未经三星书面授权而发布，传送，或违背本文件中的任何内容或数据是严格禁止的。

8-3-20.电机

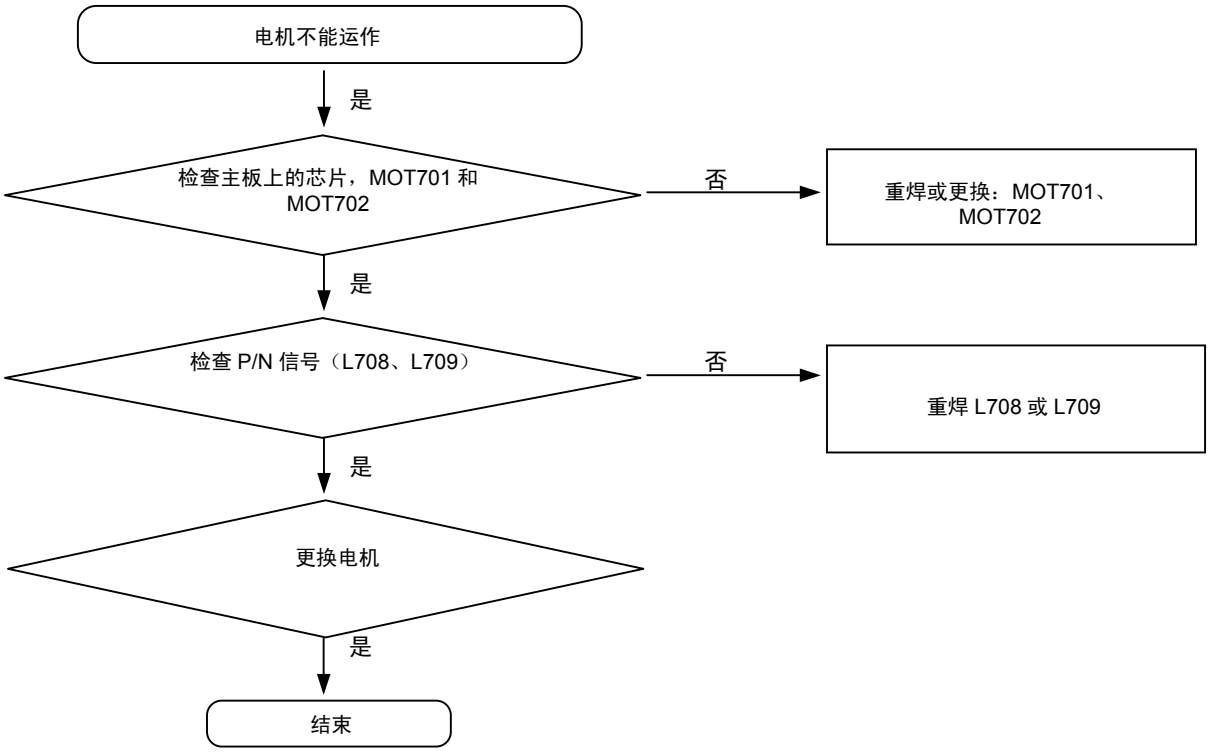

保密和所有权-本维修手册内容的变更恕不另行通知。
未经三星书面授权而发布，传送，或违背本文件中的任何内容或数据是严格禁止的。

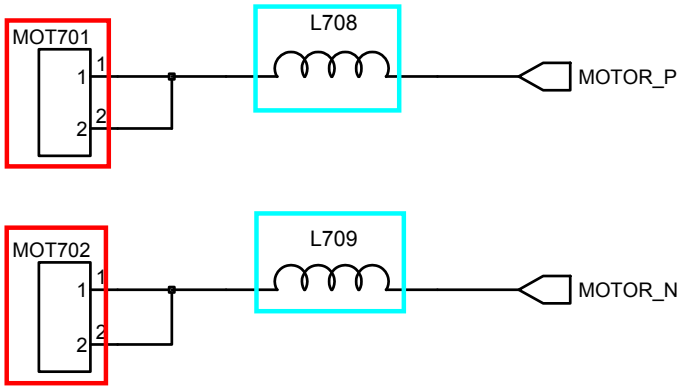

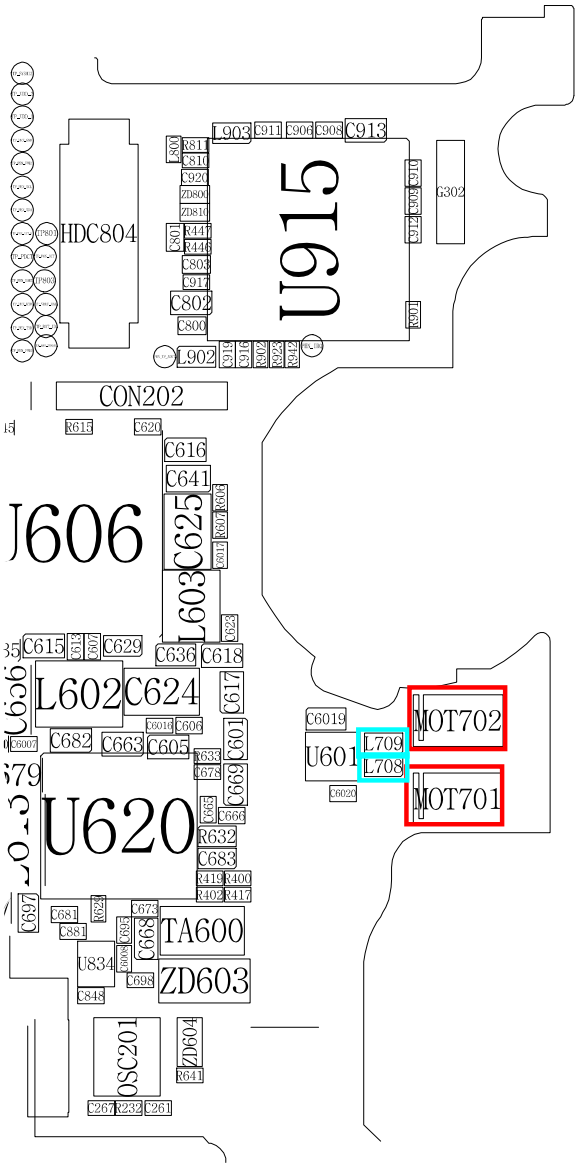

Confidential and proprietary-the contents in this service guide subject to change without prior notice.
Distribution, transmission, or infringement of any content or data from this document without Samsung's written authorization is strictly prohibited.

8-3-21.GSM1800/1900 接收器

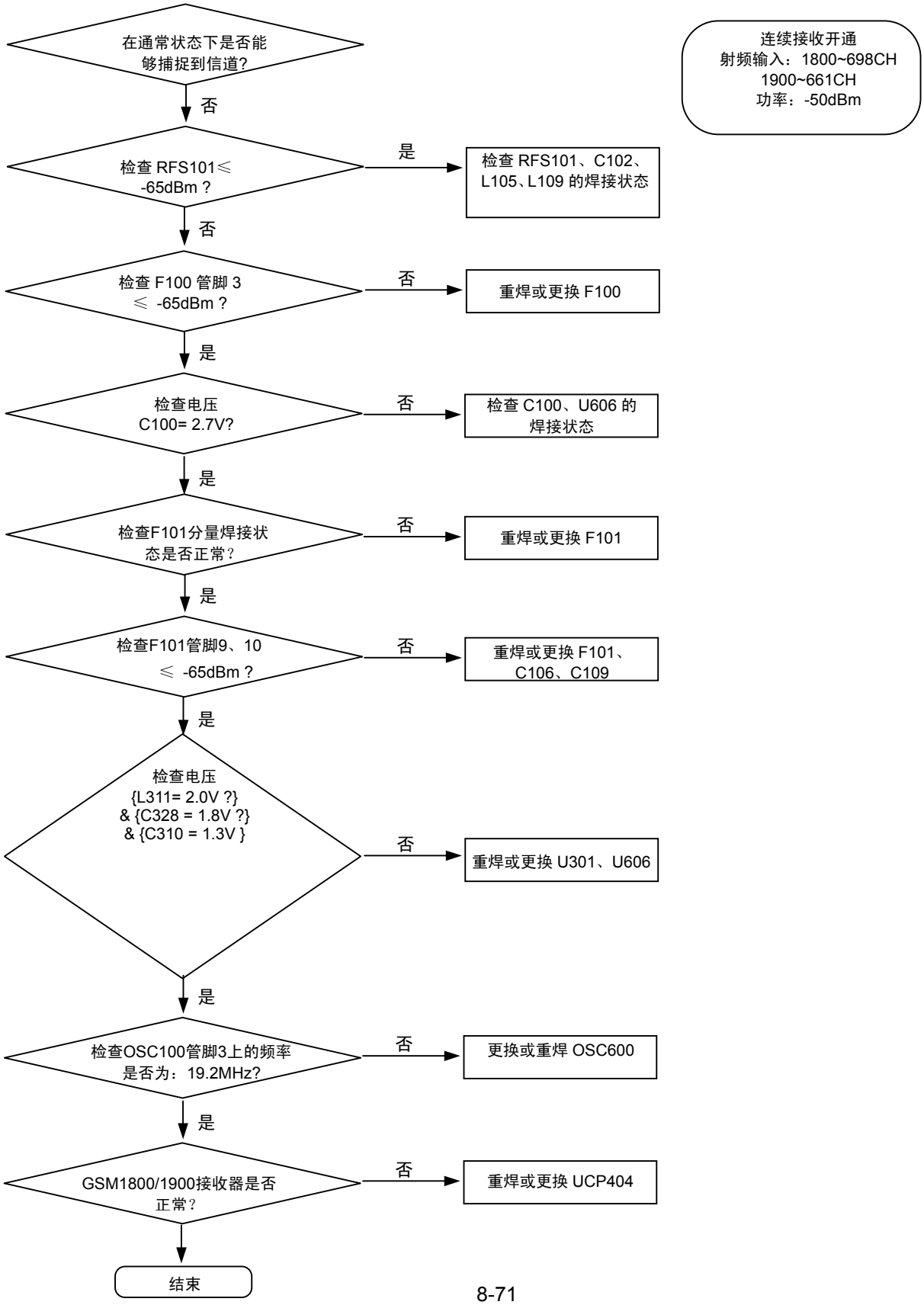

保密和所有权-本维修手册内容的变更恕不另行通知。
未经三星书面授权而发布，传送，或违背本文件中的任何内容或数据是严格禁止的。

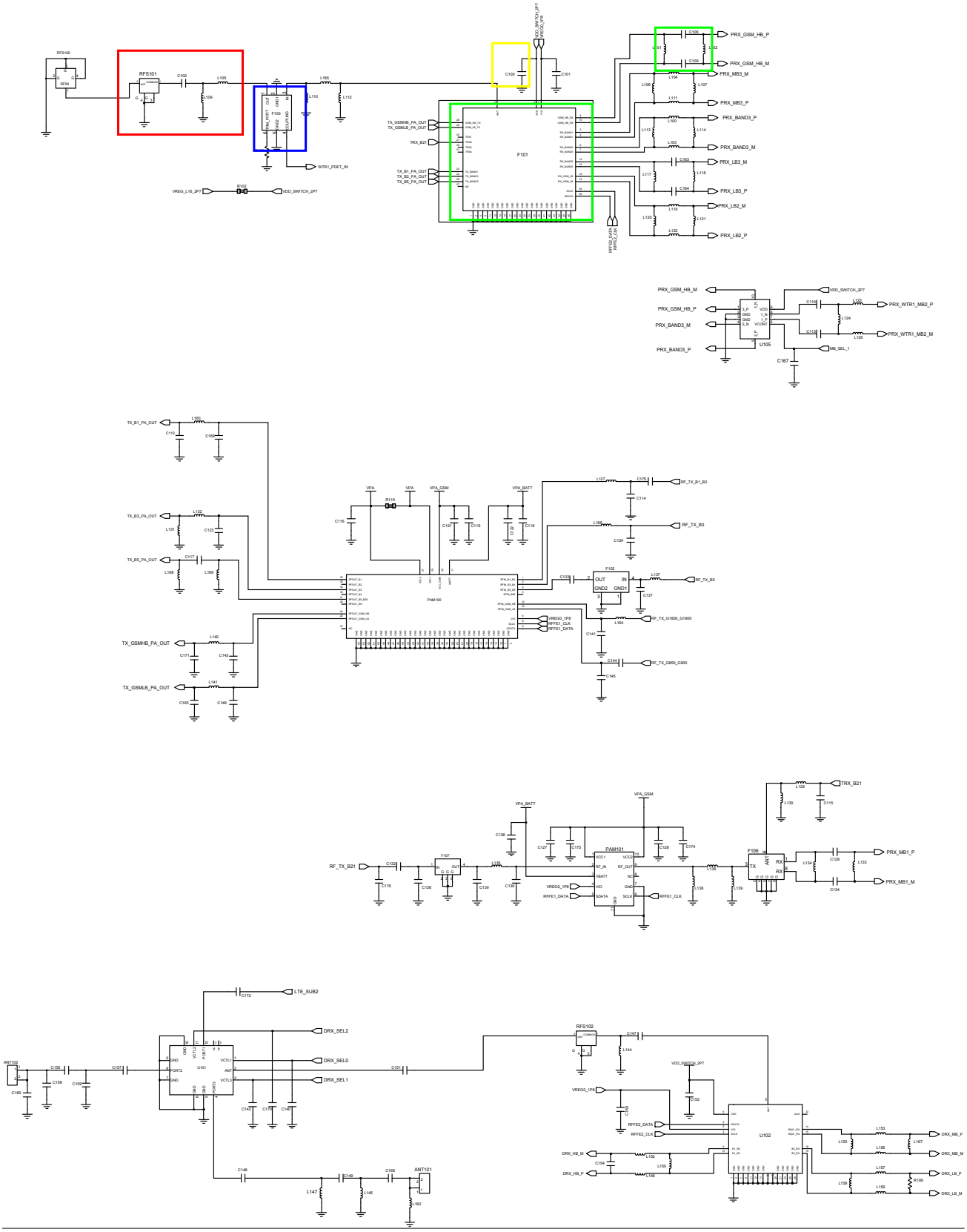

Confidential and proprietary-the contents in this service guide subject to change without prior notice.
Distribution, transmission, or infringement of any content or data from this document without Samsung's written authorization is strictly prohibited.

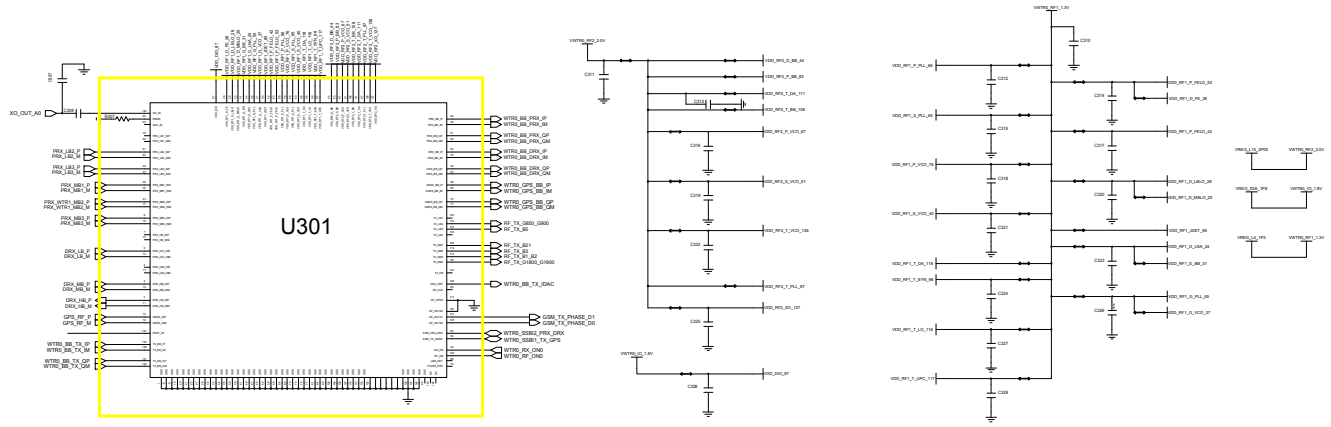

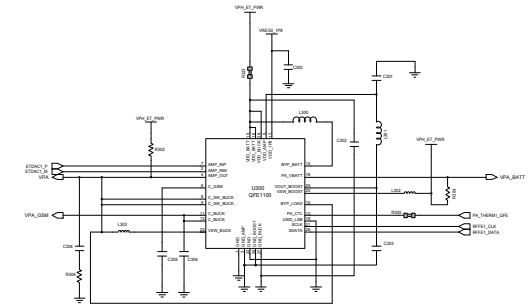

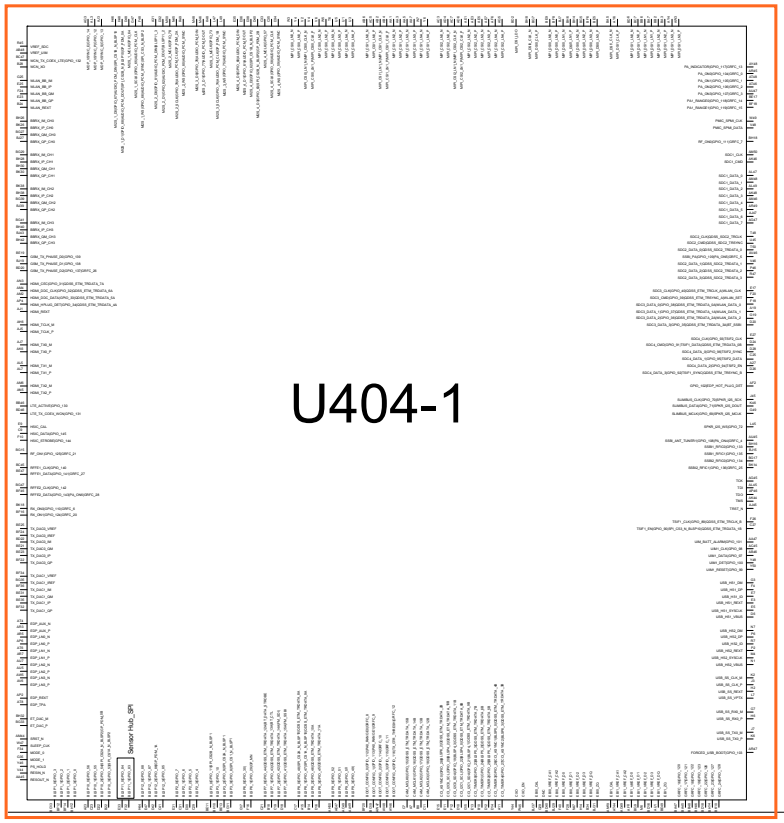

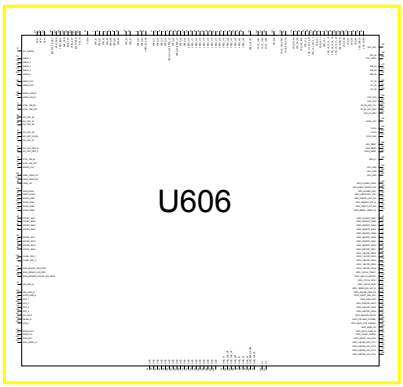

Confidential and proprietary-the contents in this service guide subject to change without prior notice.
Distribution, transmission, or infringement of any content or data from this document without Samsung's written authorization is strictly prohibited.

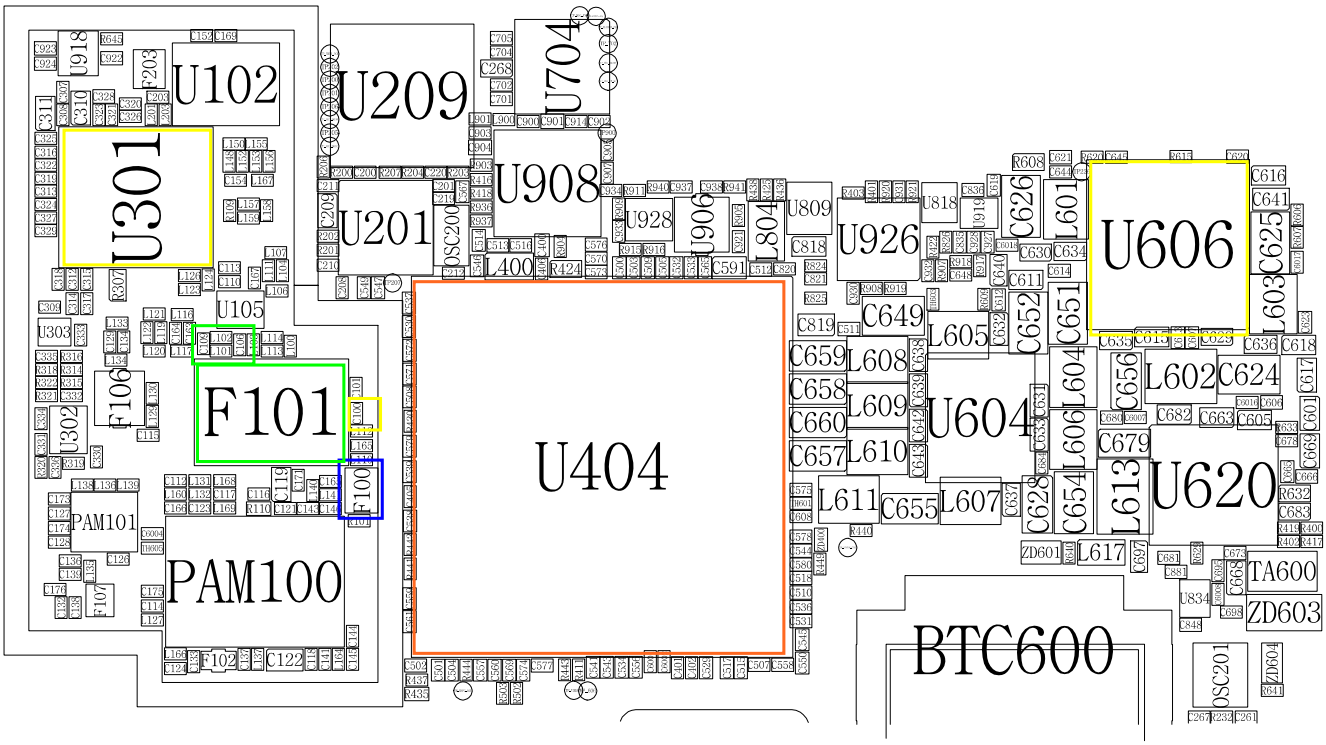

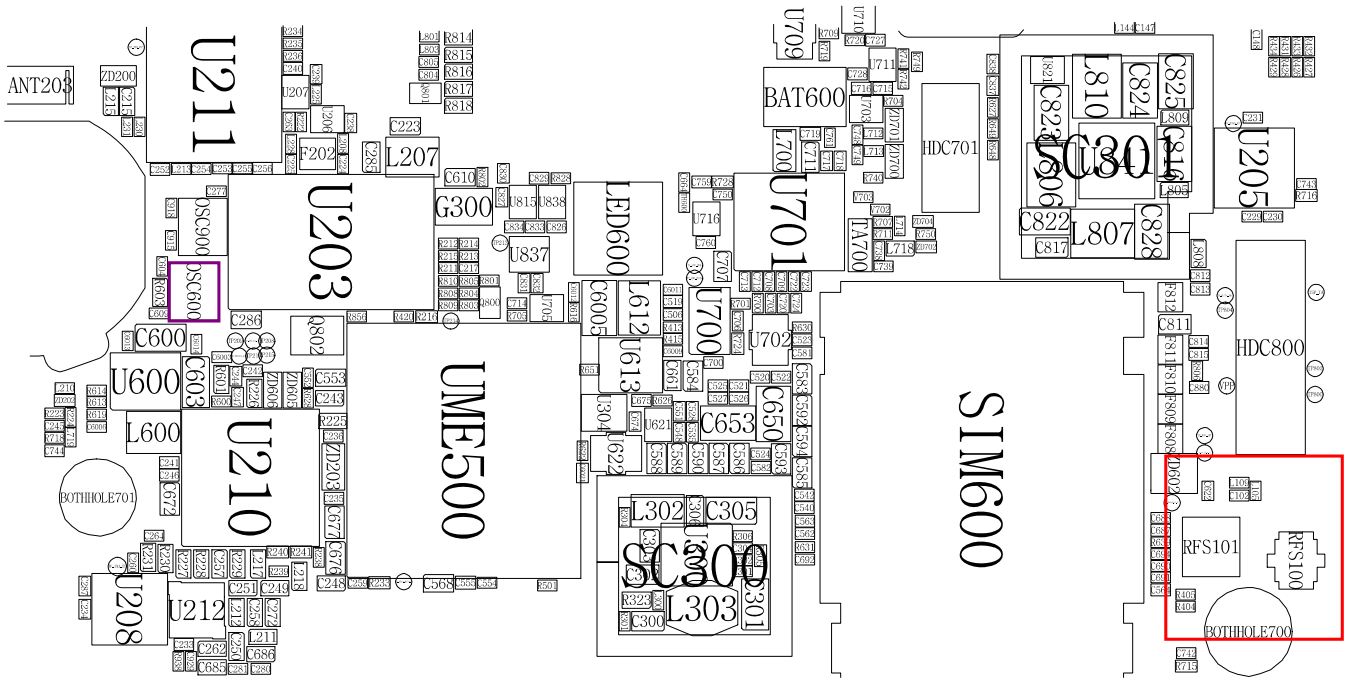

Confidential and proprietary-the contents in this service guide subject to change without prior notice.
Distribution, transmission, or infringement of any content or data from this document without Samsung's written authorization is strictly prohibited.

8-3-22.GSM850/900 接收器

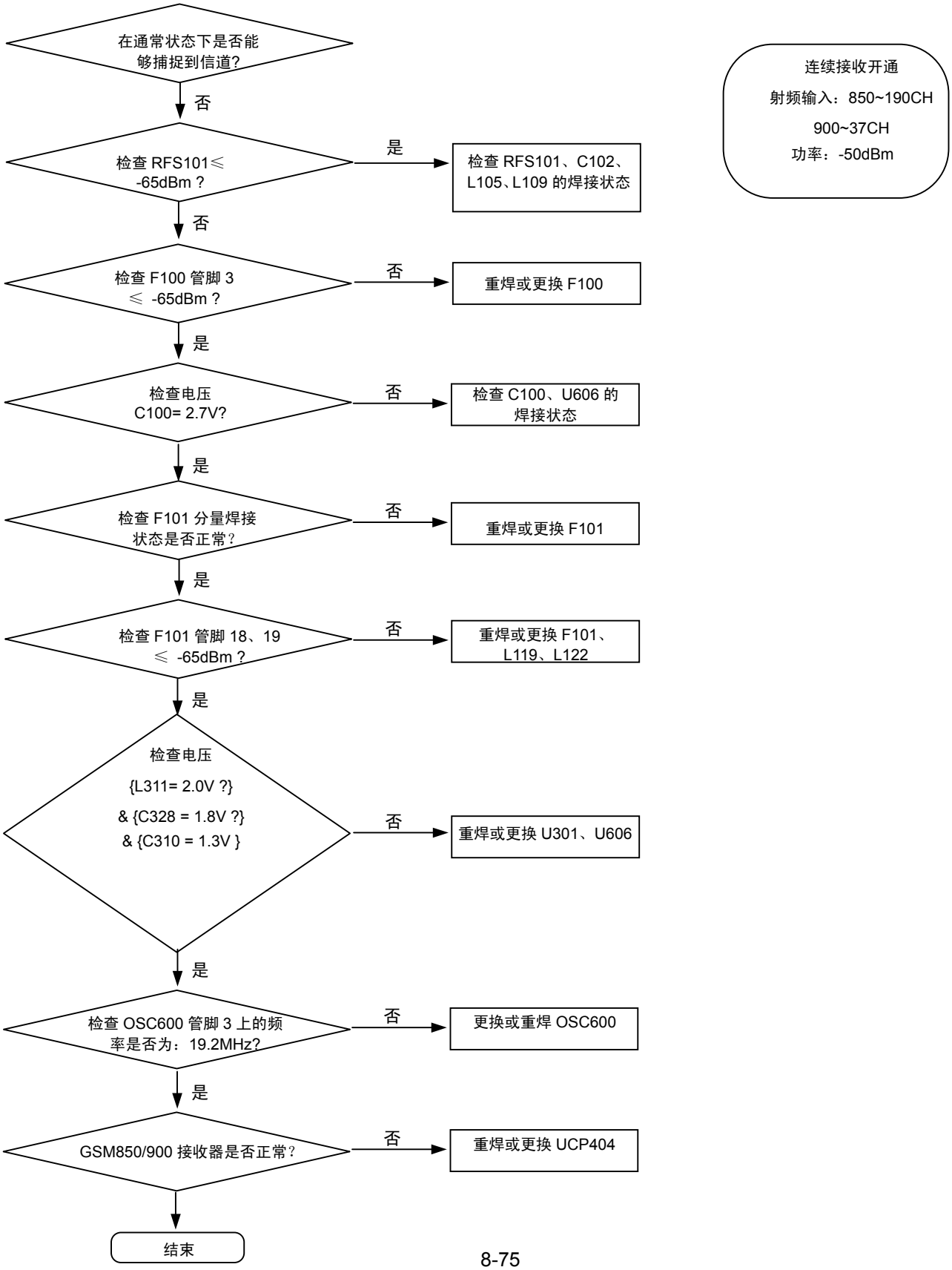

保密和所有权-本维修手册内容的变更恕不另行通知。
未经三星书面授权而发布，传送，或违背本文件中的任何内容或数据是严格禁止的。

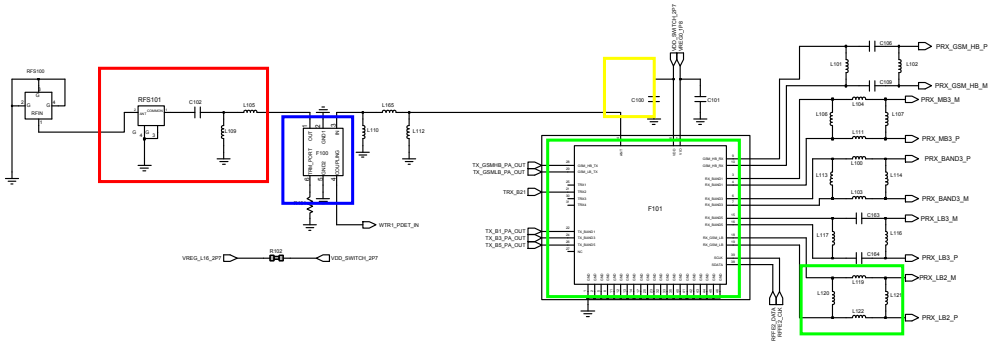

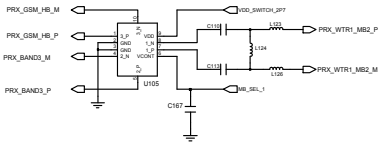

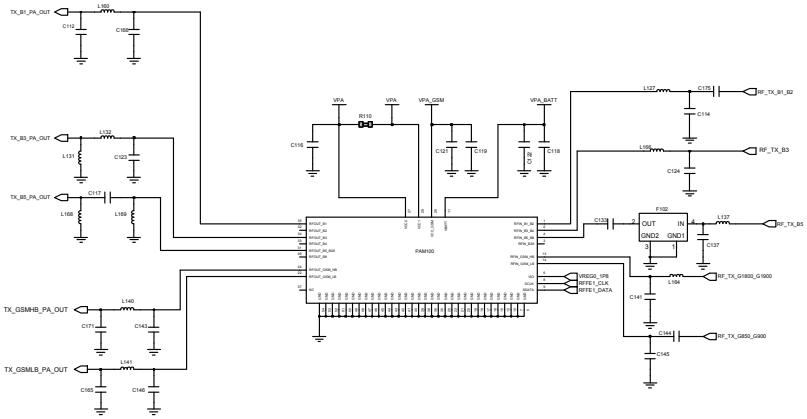

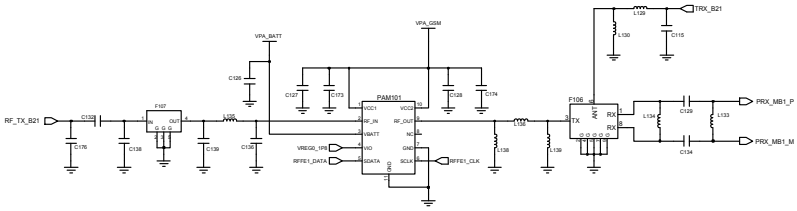

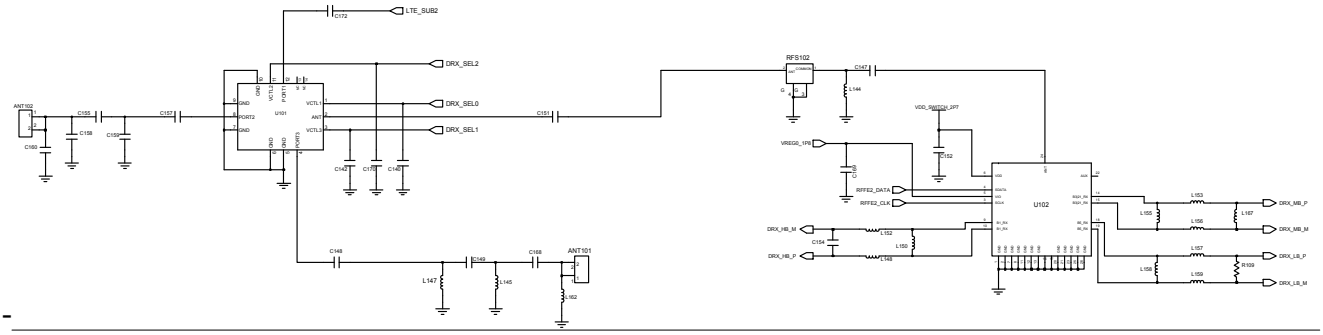

Confidential and proprietary-the contents in this service guide subject to change without prior notice.
Distribution, transmission, or infringement of any content or data from this document without Samsung's written authorization is strictly prohibited.

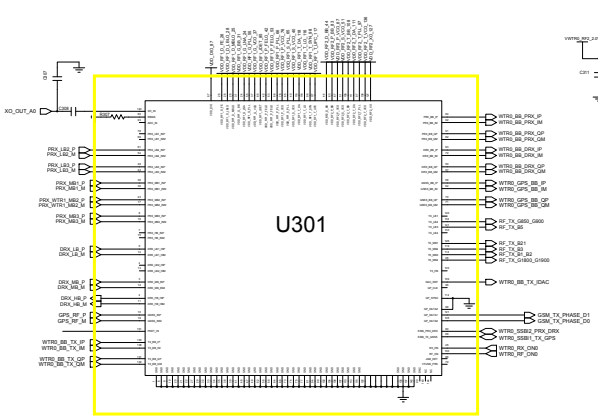

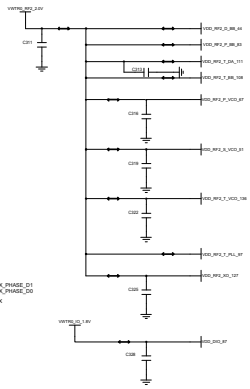

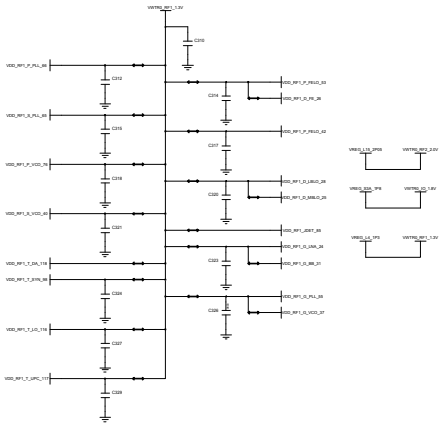

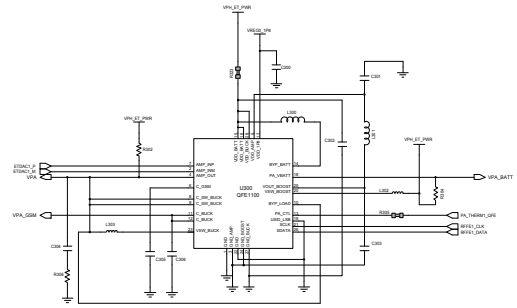

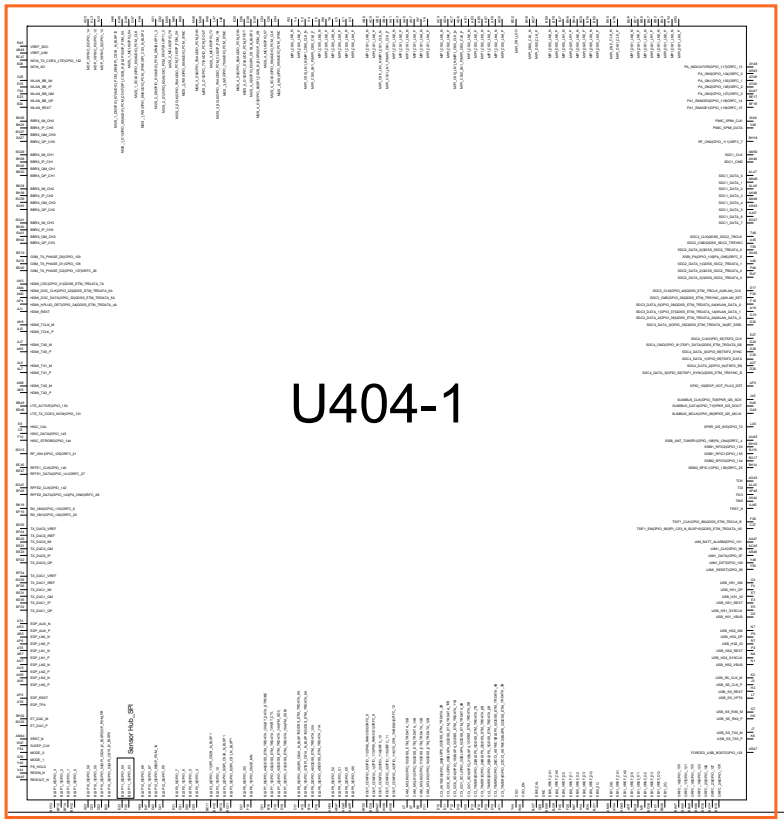

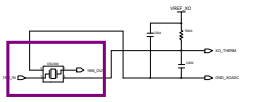

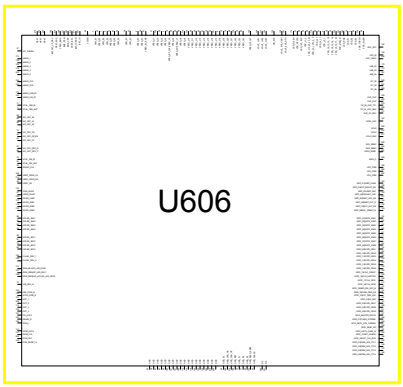

Confidential and proprietary-the contents in this service guide subject to change without prior notice.
Distribution, transmission, or infringement of any content or data from this document without Samsung's written authorization is strictly prohibited.

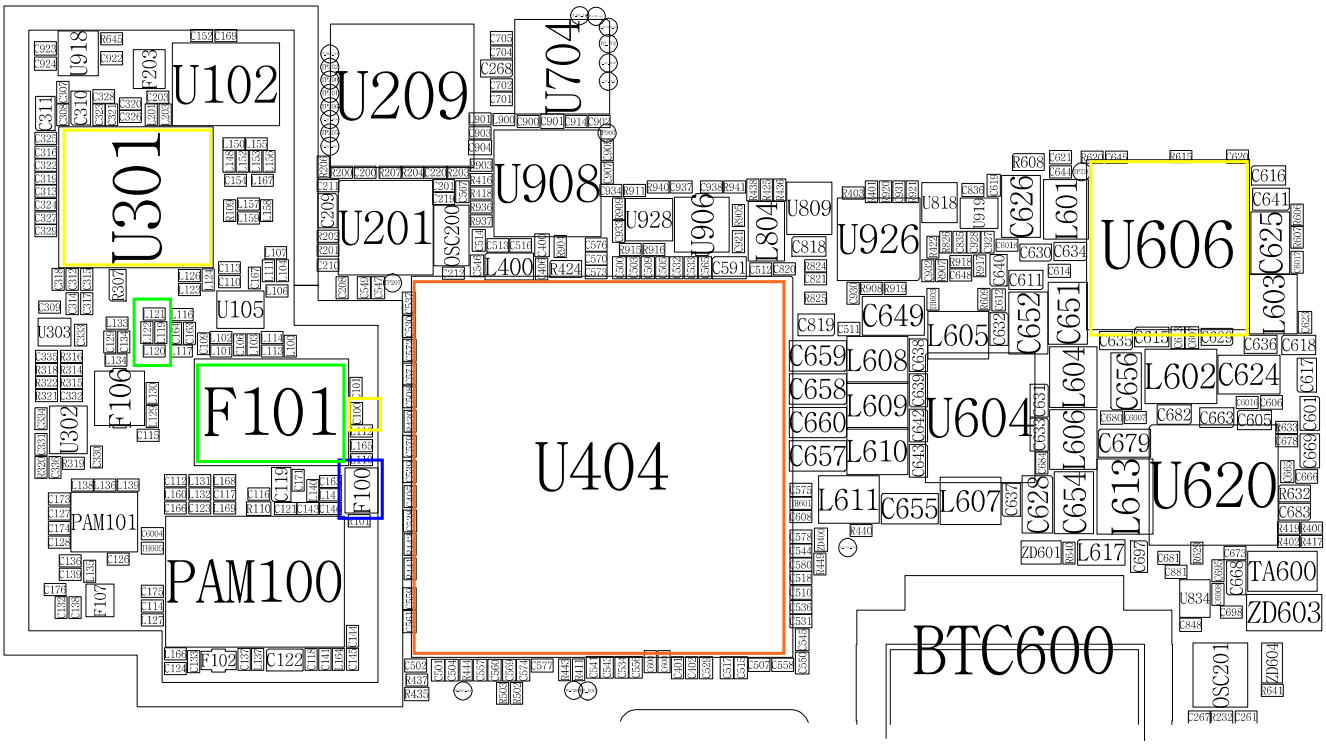

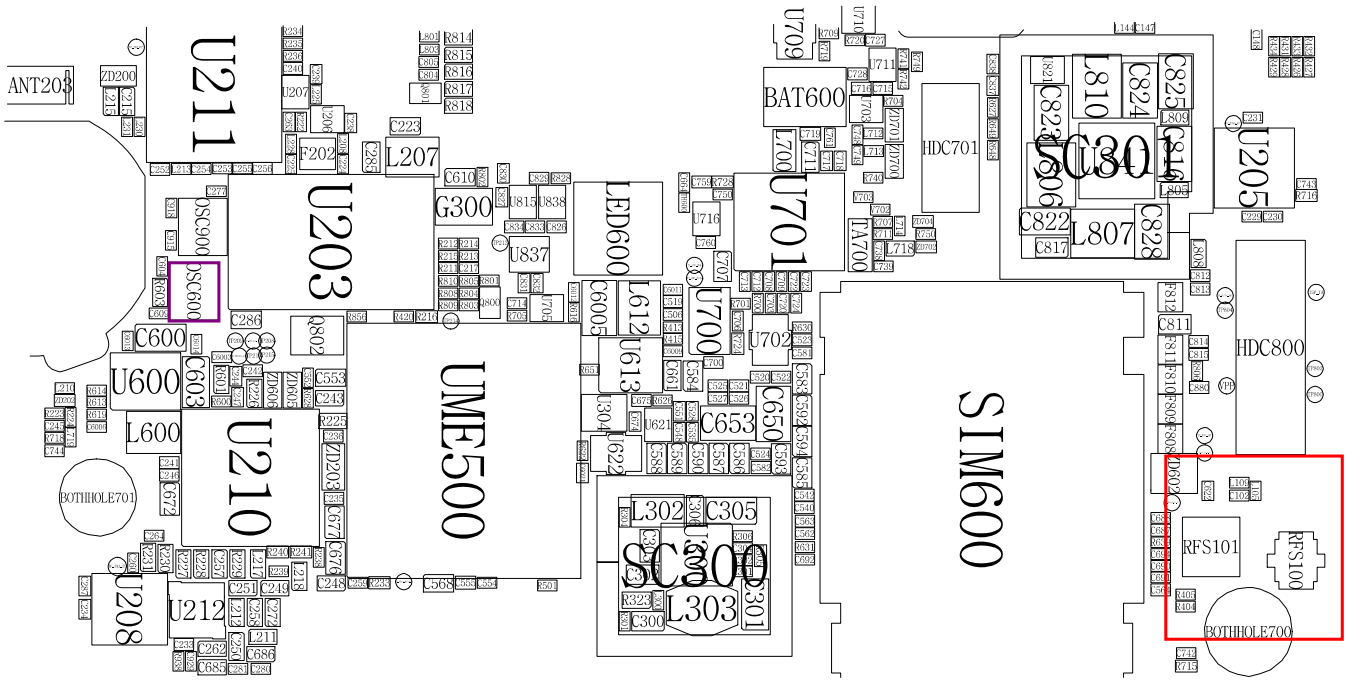

Confidential and proprietary-the contents in this service guide subject to change without prior notice.
Distribution, transmission, or infringement of any content or data from this document without Samsung's written authorization is strictly prohibited.

8-3-23.WCDMA 2100/LTE Band1 接收器

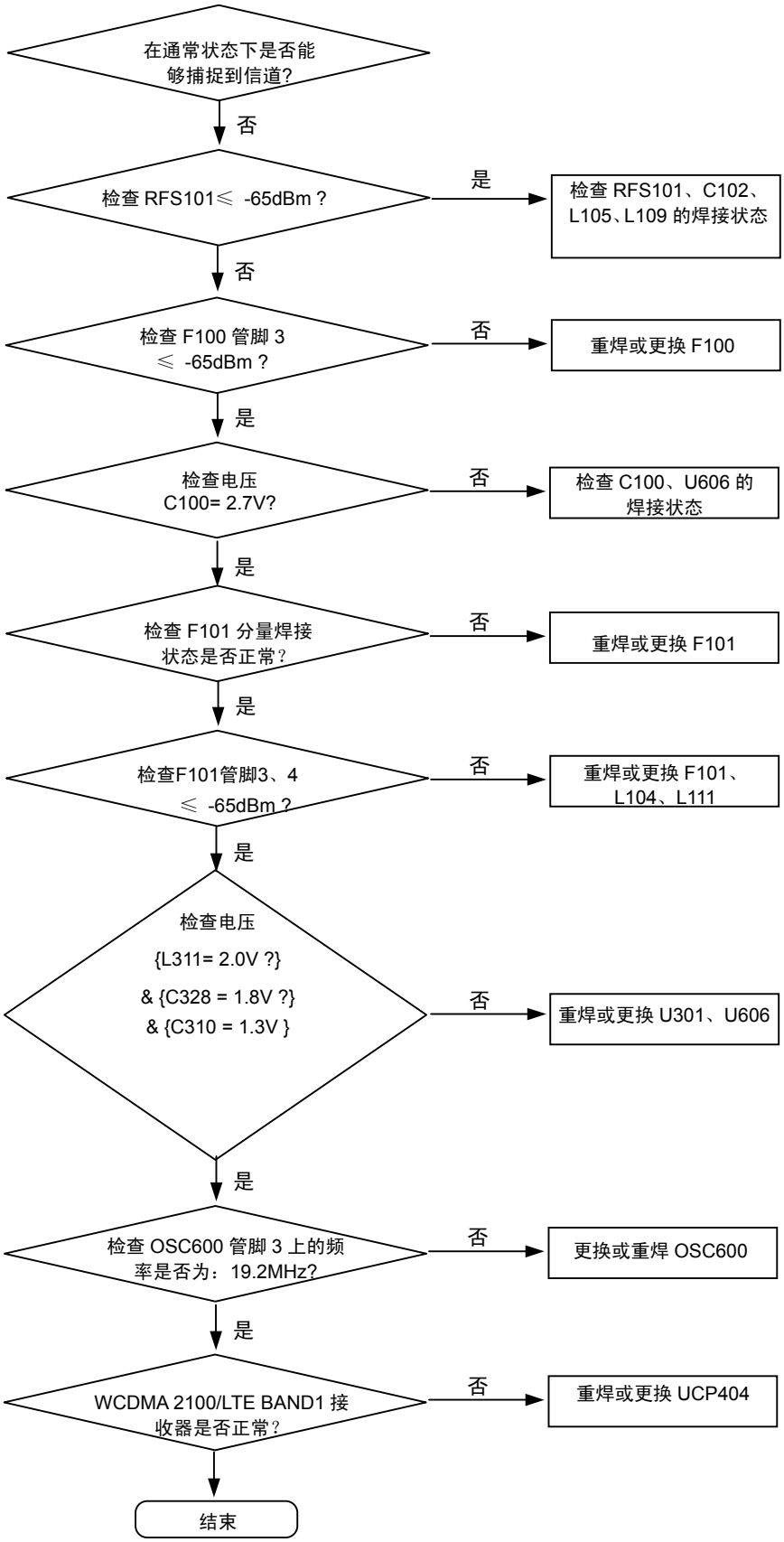

连续接收开通
射频输入：W2100~10700CH
LTE B1~300CH
功率：-50dBm

保密和所有权-本维修手册内容的变更恕不另行通知。
未经三星书面授权而发布，传送，或违背本文件中的任何内容或数据是严格禁止的。

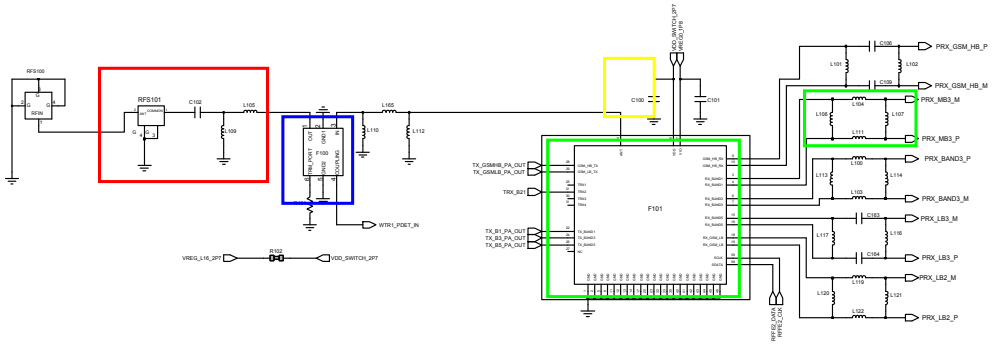

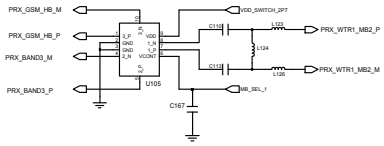

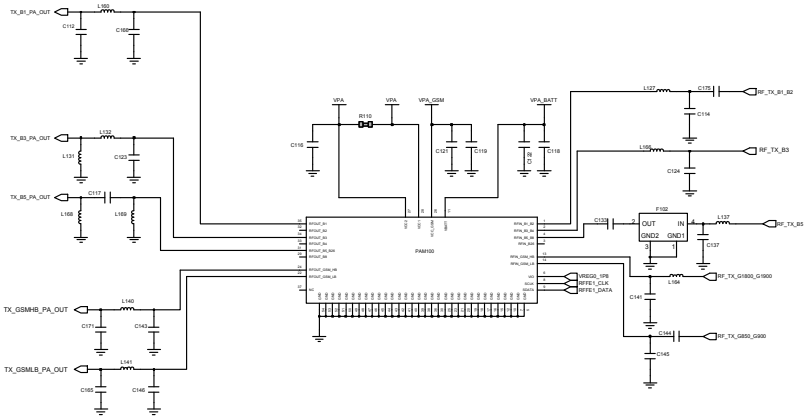

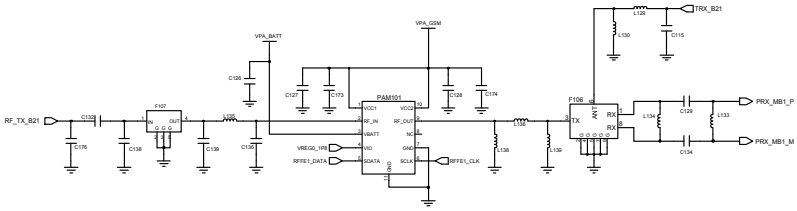

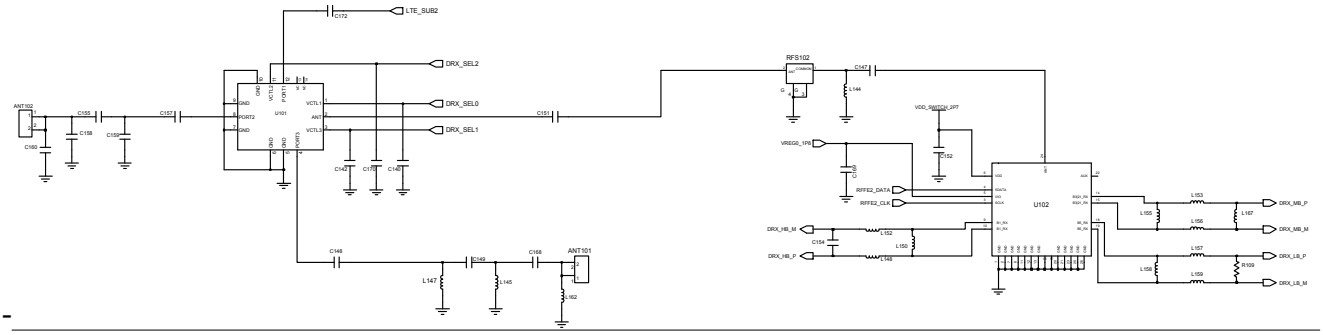

-

Confidential and proprietary-the contents in this service guide subject to change without prior notice.
Distribution, transmission, or infringement of any content or data from this document without Samsung's written authorization is strictly prohibited.

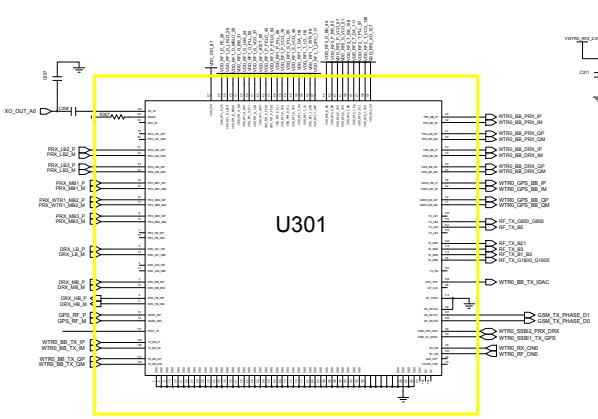

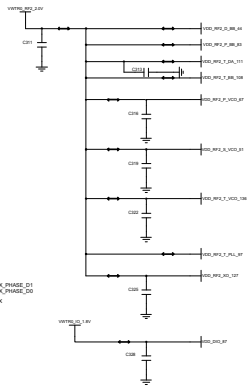

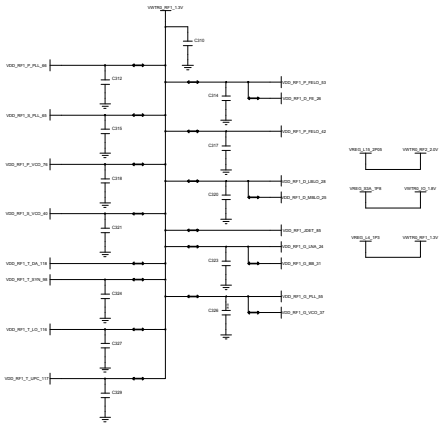

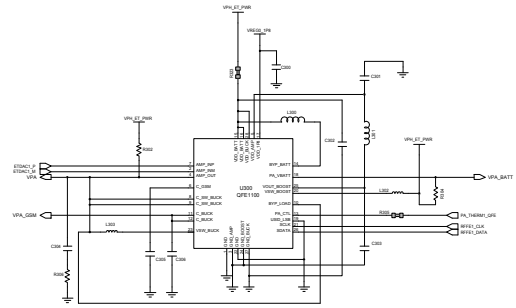

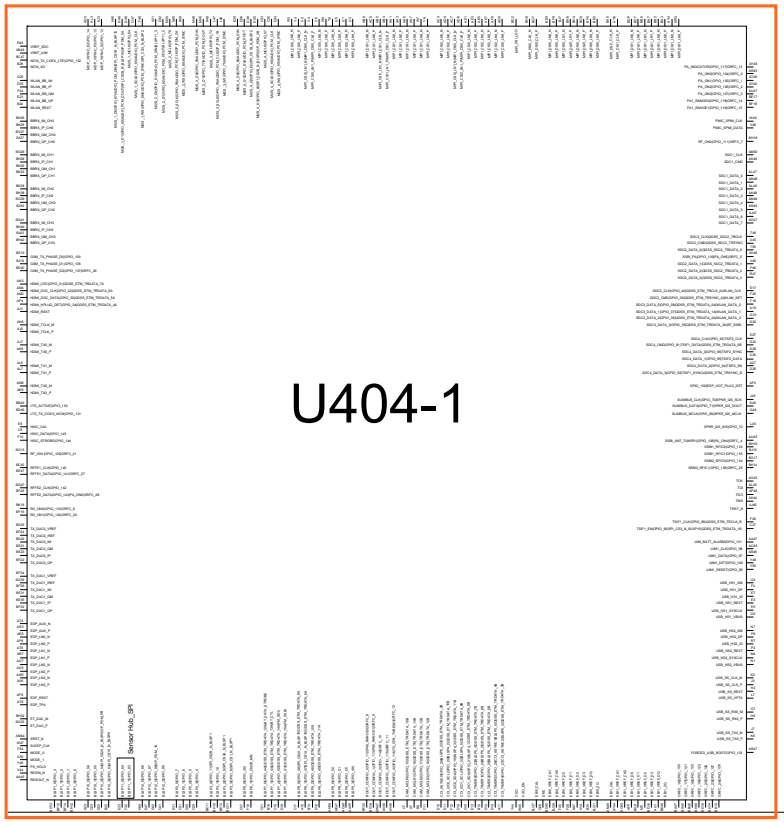

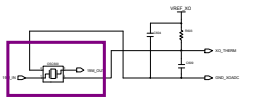

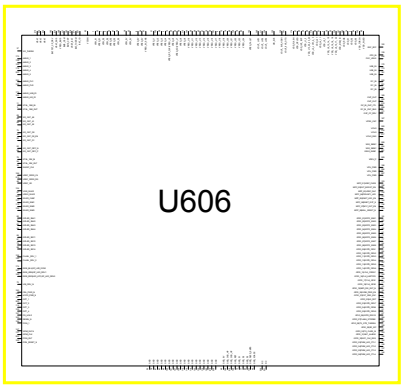

Confidential and proprietary-the contents in this service guide subject to change without prior notice.
Distribution, transmission, or infringement of any content or data from this document without Samsung's written authorization is strictly prohibited.

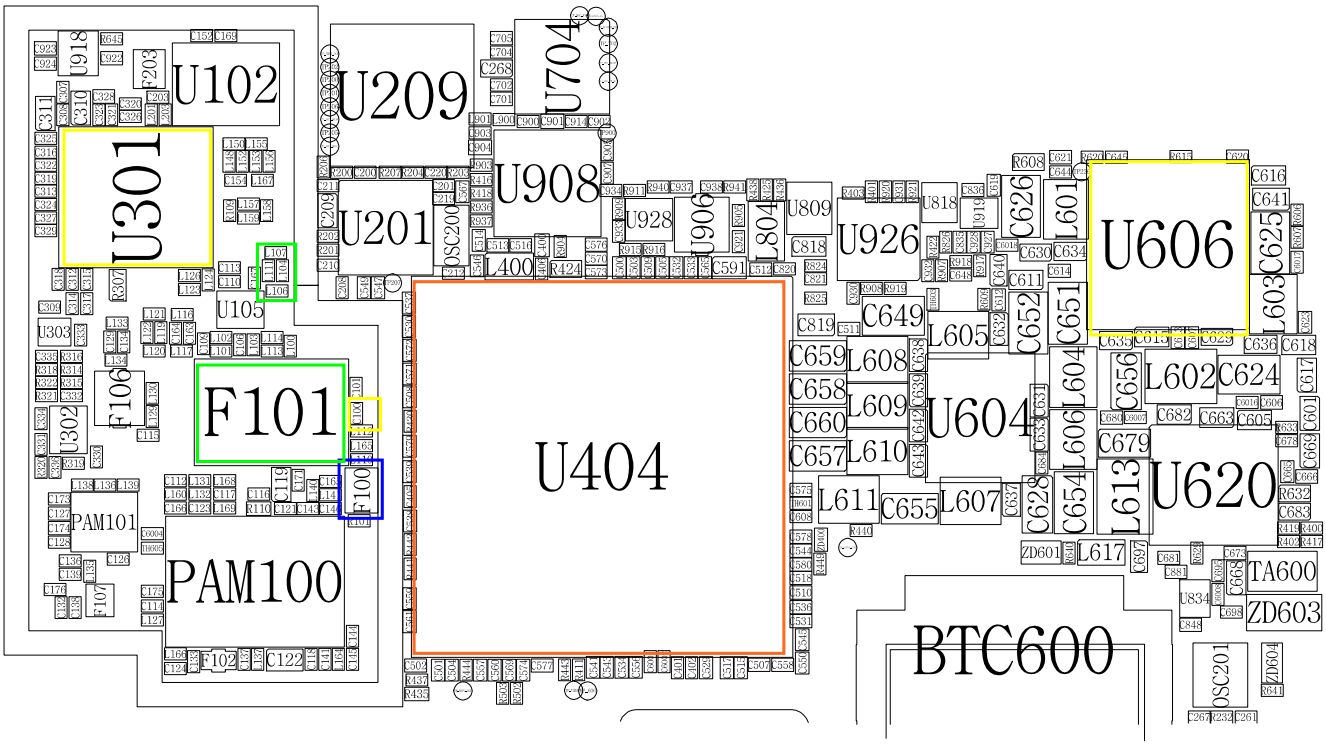

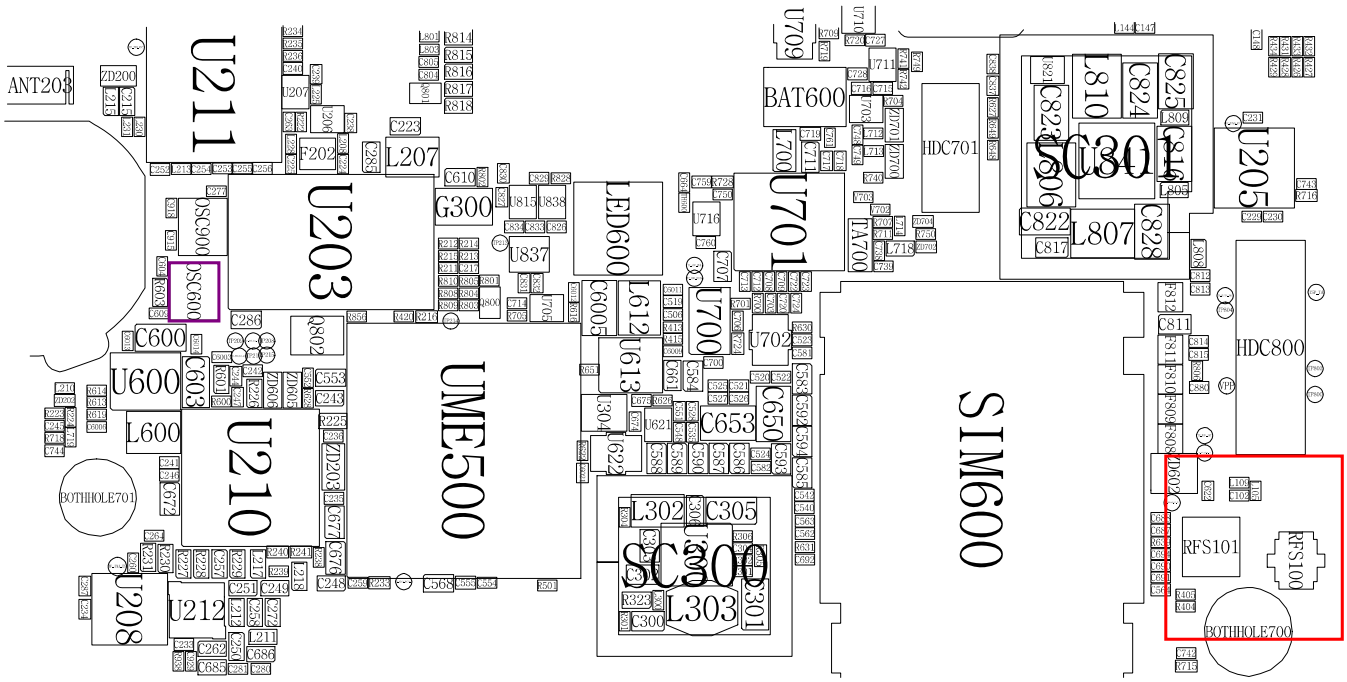

Confidential and proprietary-the contents in this service guide subject to change without prior notice.
Distribution, transmission, or infringement of any content or data from this document without Samsung's written authorization is strictly prohibited.

8-3-24.WCDMA 800/850/NEW800/LTE Band19 接收器

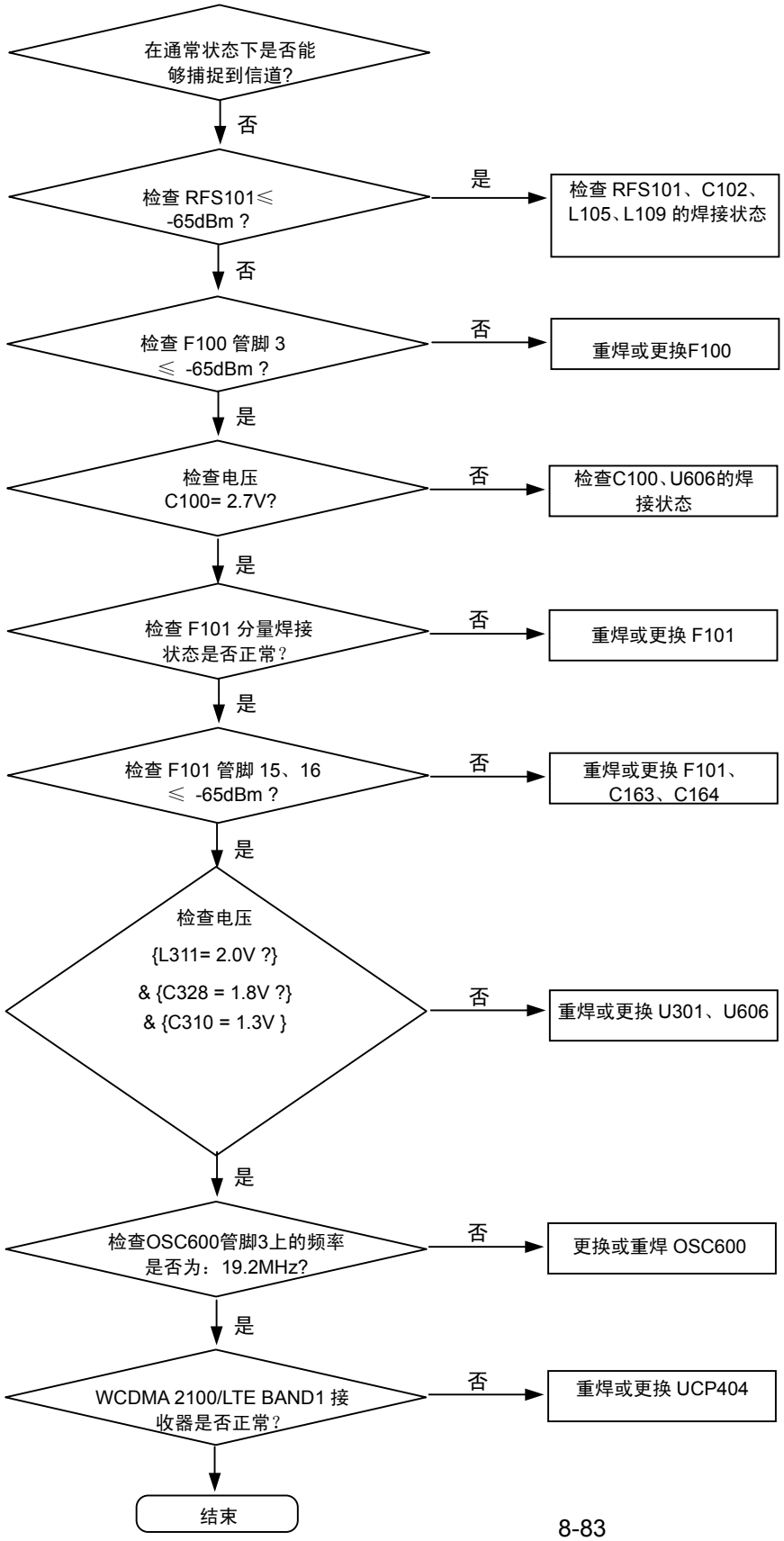

连续接收开通
射频输入：WCDMA~4400CH
LTE B19~6075CH
功率：-50dBm

保密和所有权-本维修手册内容的变更恕不另行通知。
未经三星书面授权而发布，传送，或违背本文件中的任何内容或数据是严格禁止的。

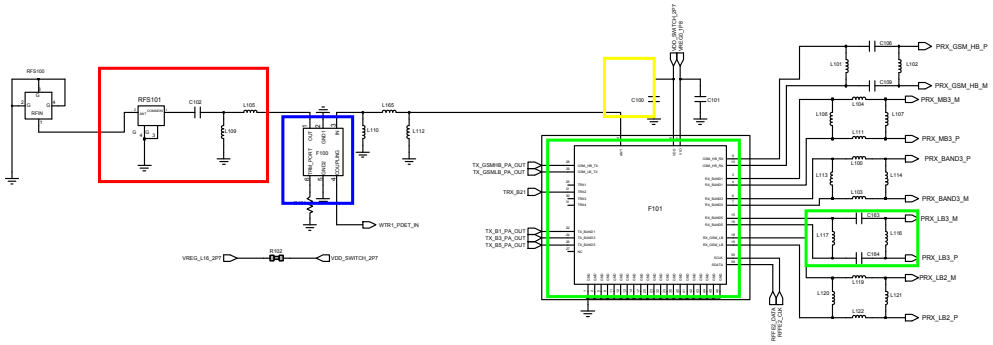

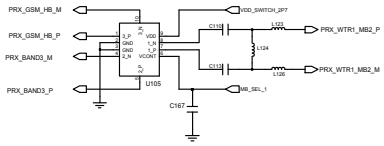

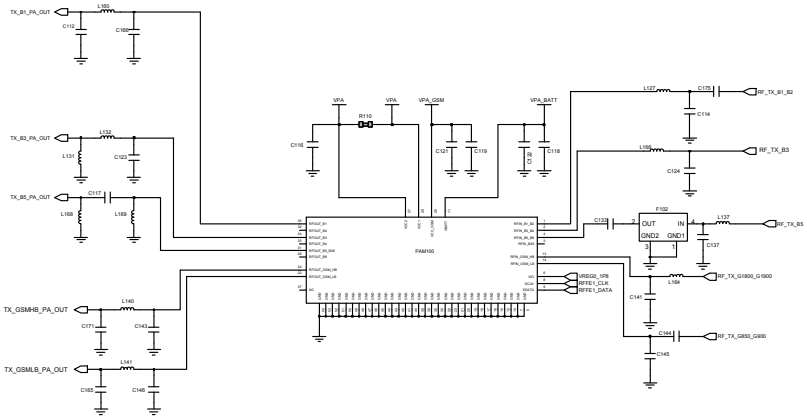

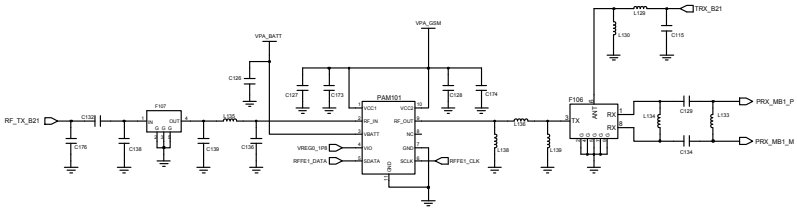

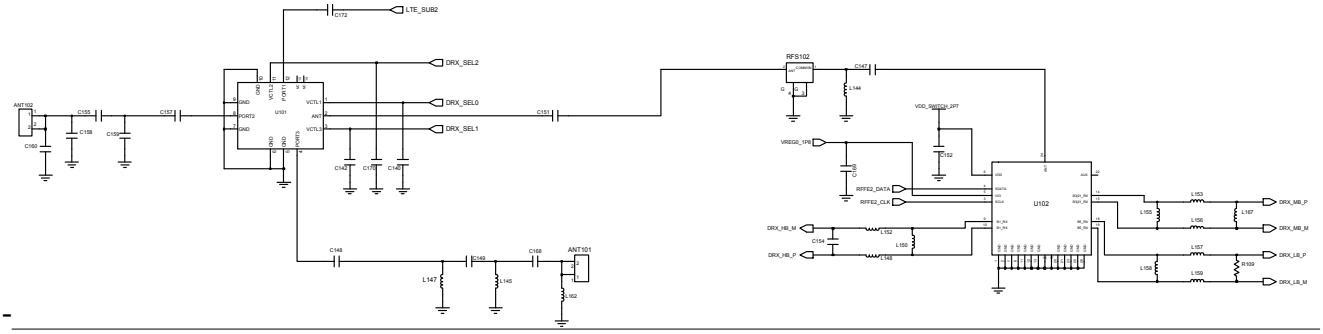

Confidential and proprietary-the contents in this service guide subject to change without prior notice.
Distribution, transmission, or infringement of any content or data from this document without Samsung's written authorization is strictly prohibited.

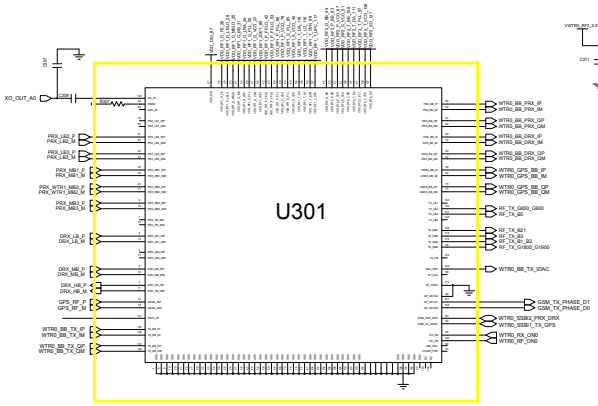

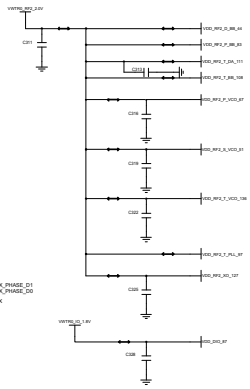

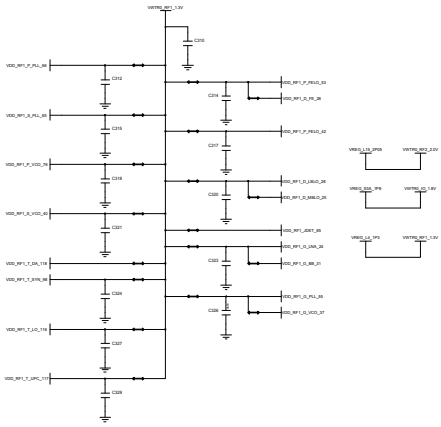

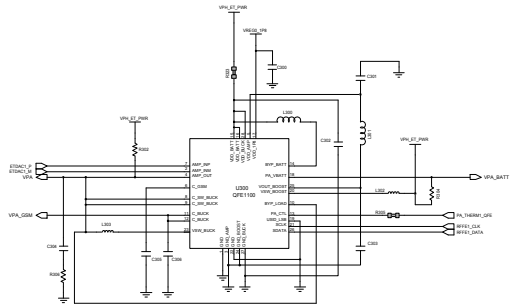

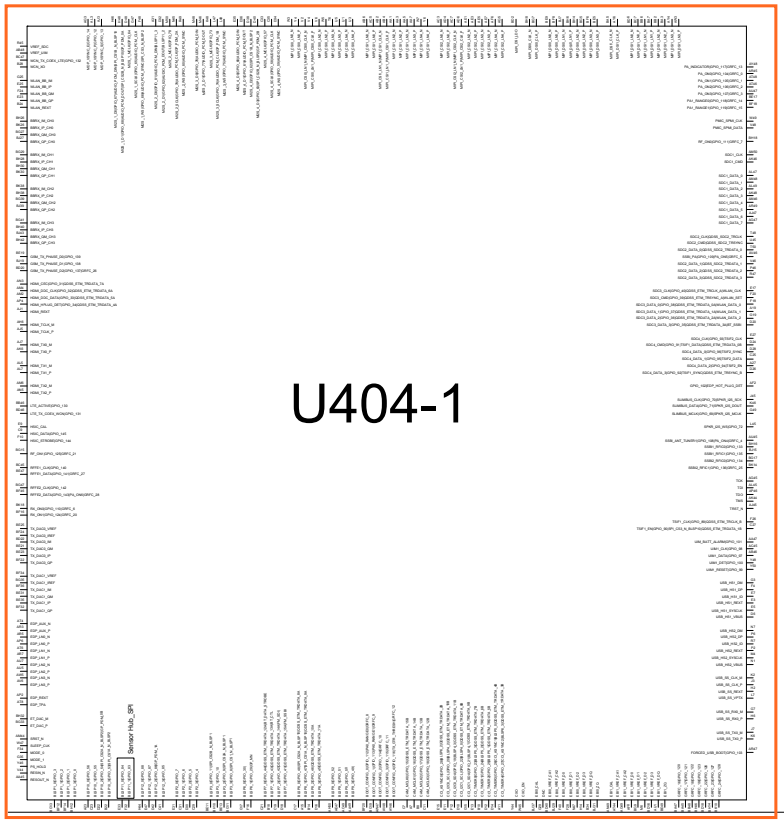

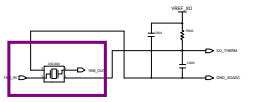

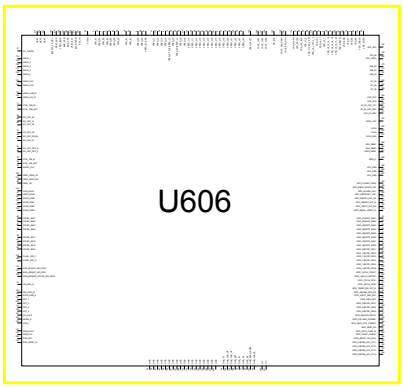

Confidential and proprietary-the contents in this service guide subject to change without prior notice.
Distribution, transmission, or infringement of any content or data from this document without Samsung's written authorization is strictly prohibited.

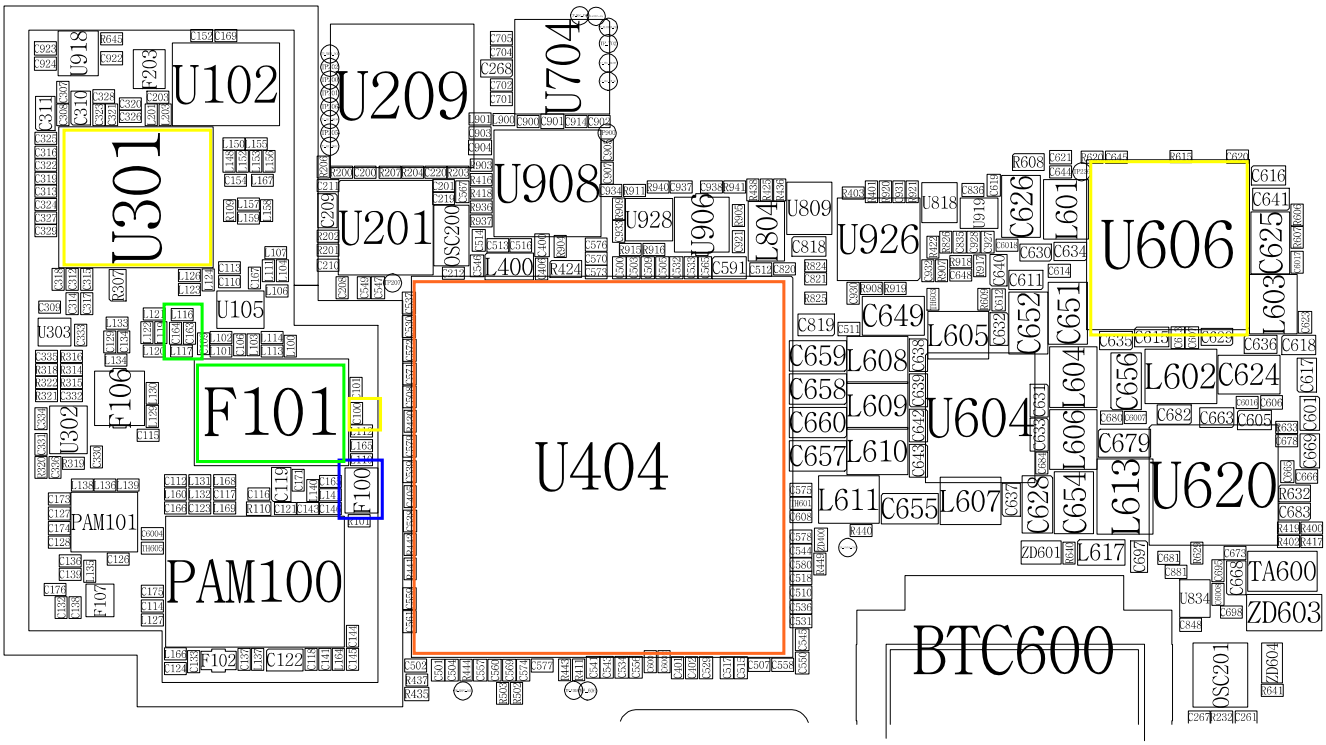

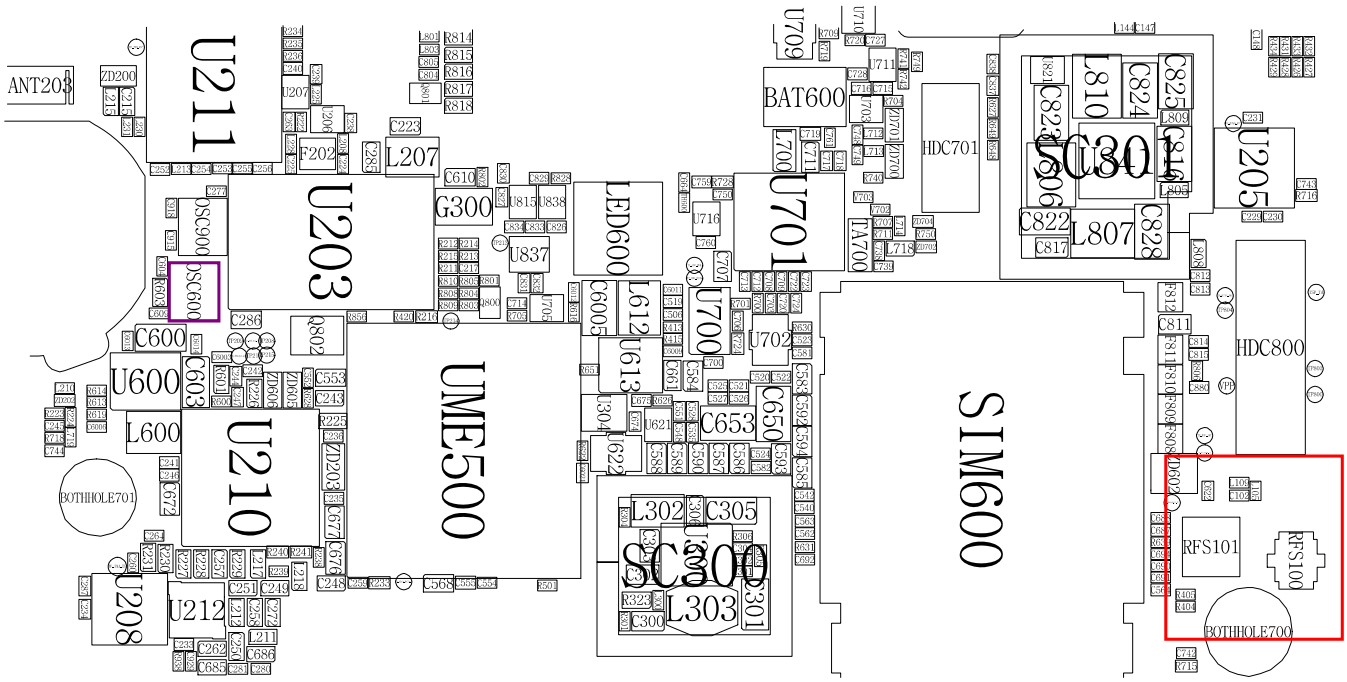

Confidential and proprietary-the contents in this service guide subject to change without prior notice.
Distribution, transmission, or infringement of any content or data from this document without Samsung's written authorization is strictly prohibited.

8-3-25.LTE Band3 接收器

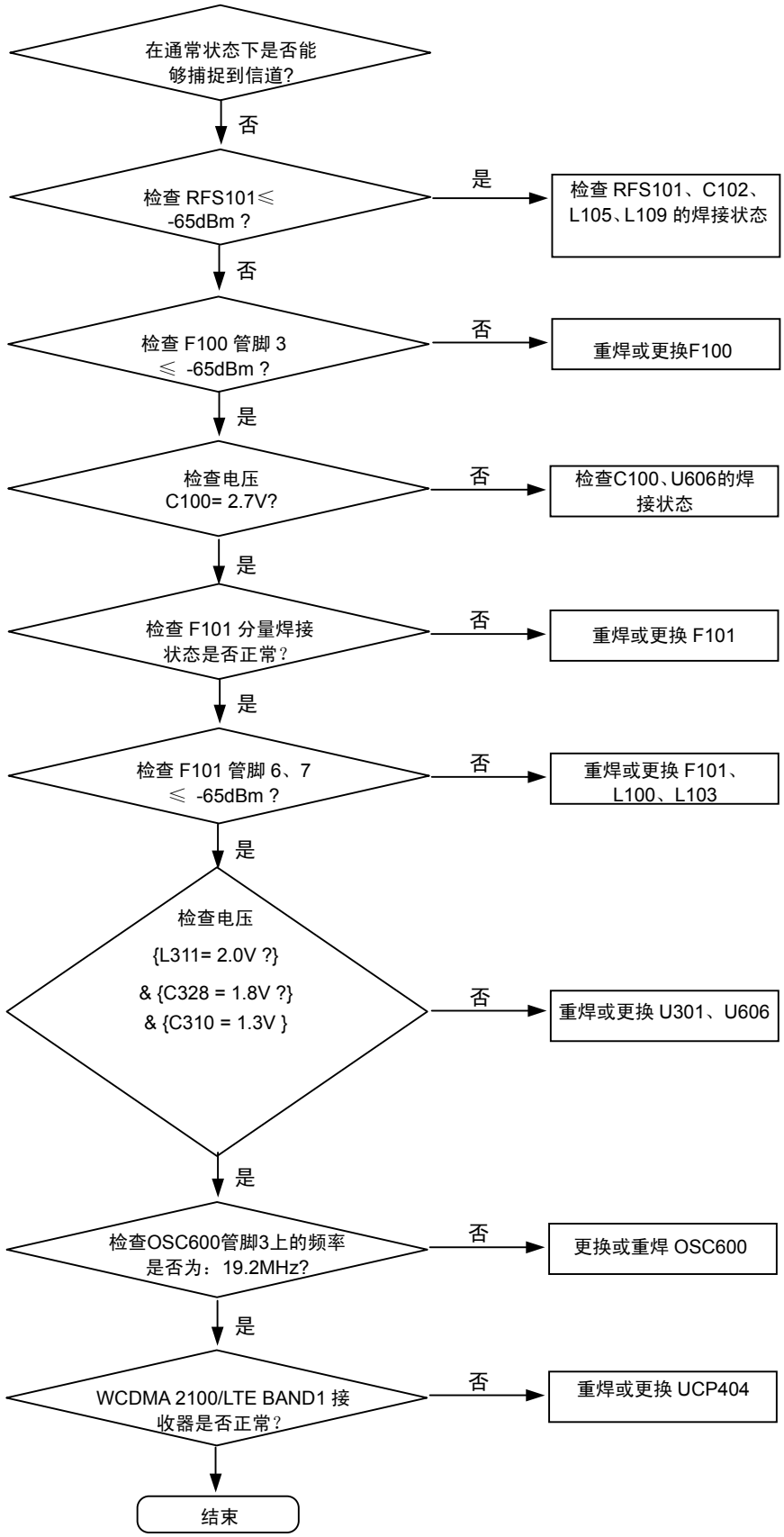

连续接收开通
射频输入：1575CH
功率：-50dBm

保密和所有权-本维修手册内容的变更恕不另行通知。
未经三星书面授权而发布，传送，或违背本文件中的任何内容或数据是严格禁止的。

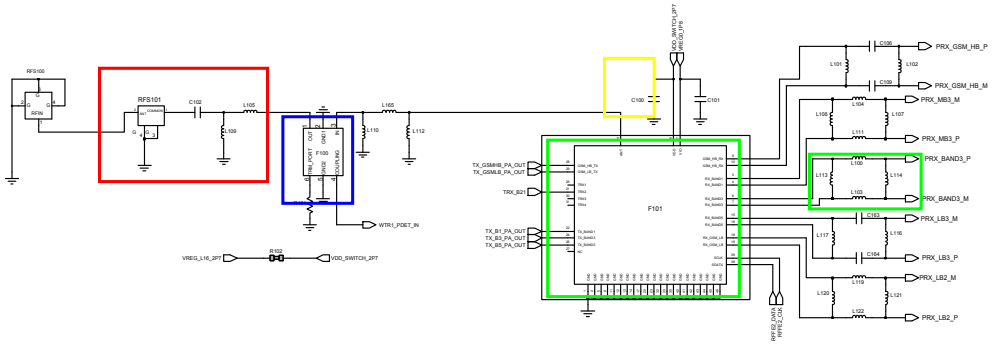

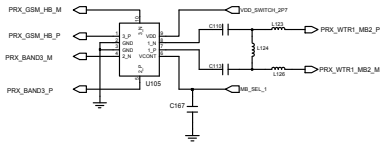

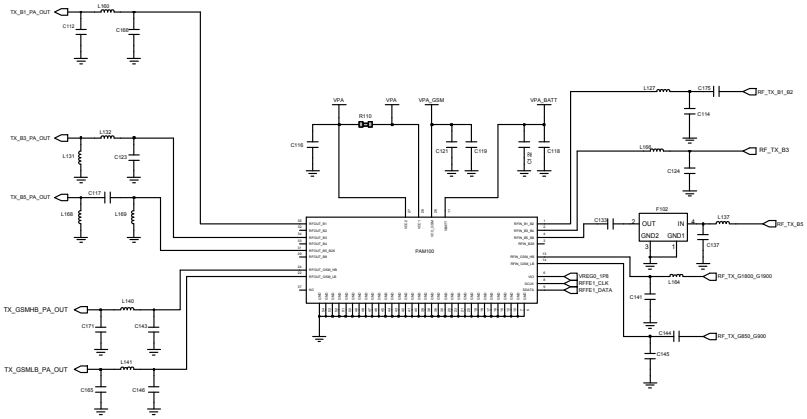

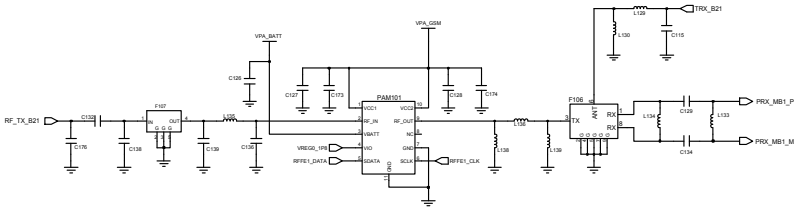

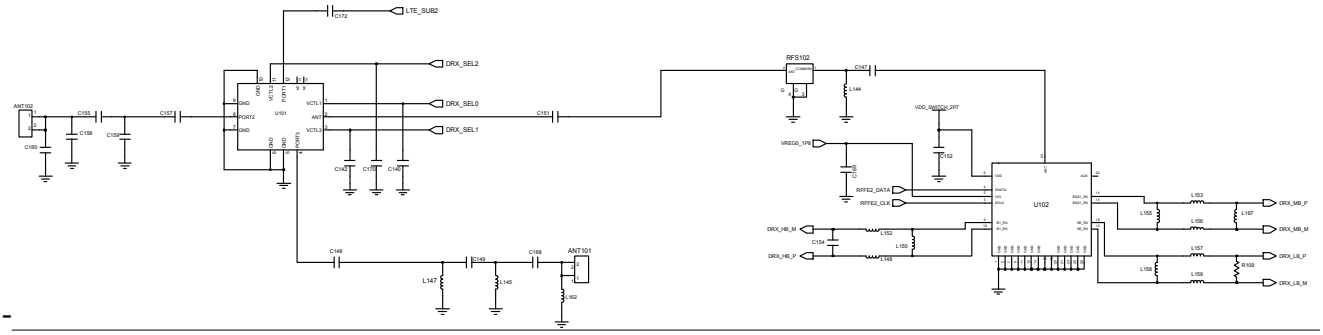

Confidential and proprietary-the contents in this service guide subject to change without prior notice.
Distribution, transmission, or infringement of any content or data from this document without Samsung's written authorization is strictly prohibited.

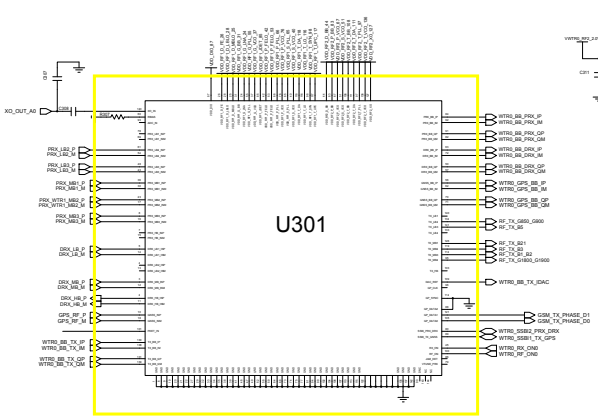

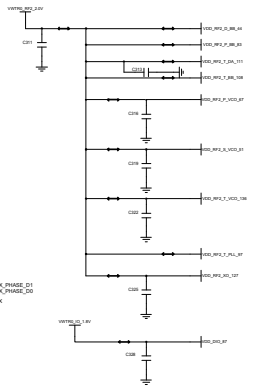

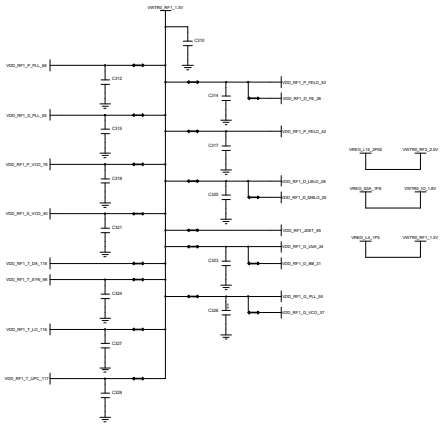

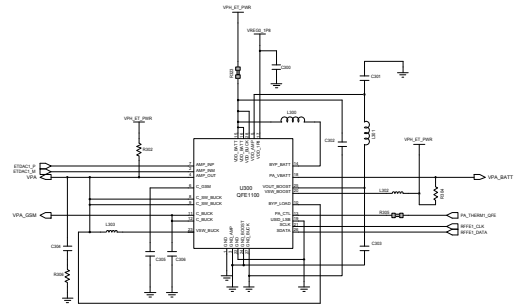

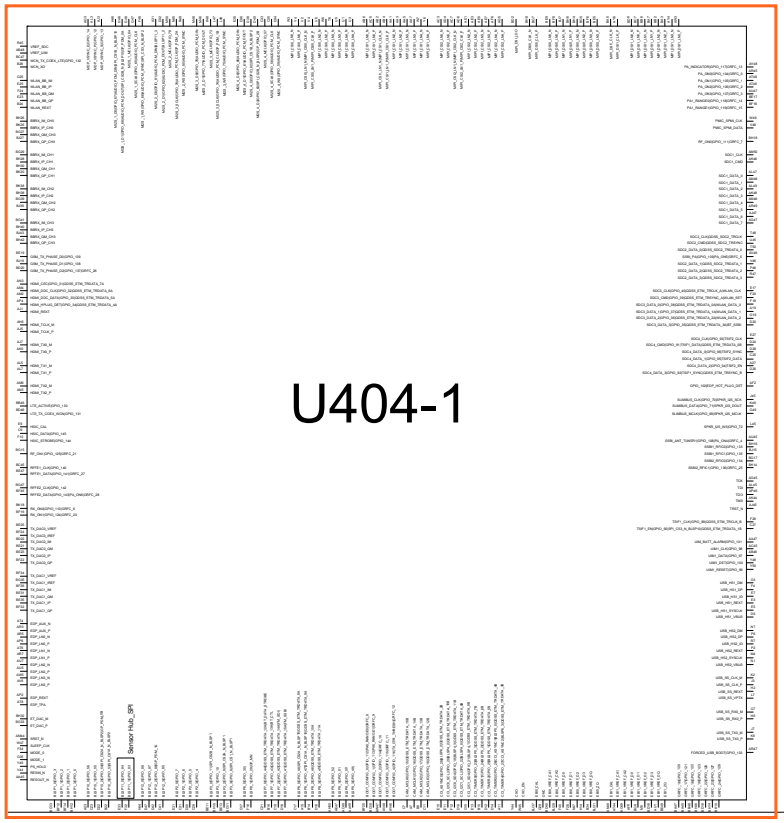

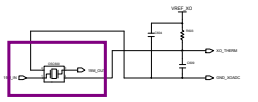

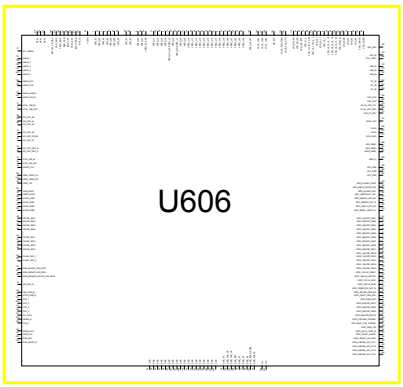

Confidential and proprietary-the contents in this service guide subject to change without prior notice.
Distribution, transmission, or infringement of any content or data from this document without Samsung's written authorization is strictly prohibited.

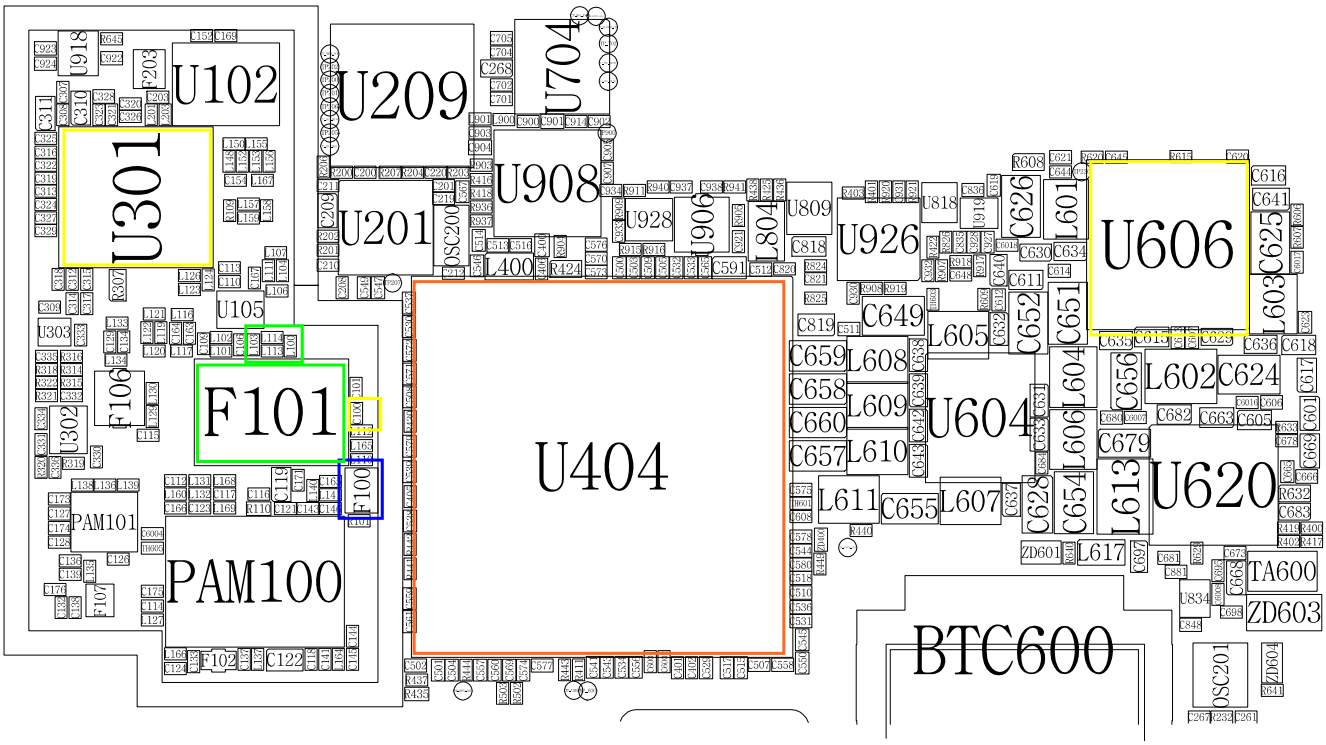

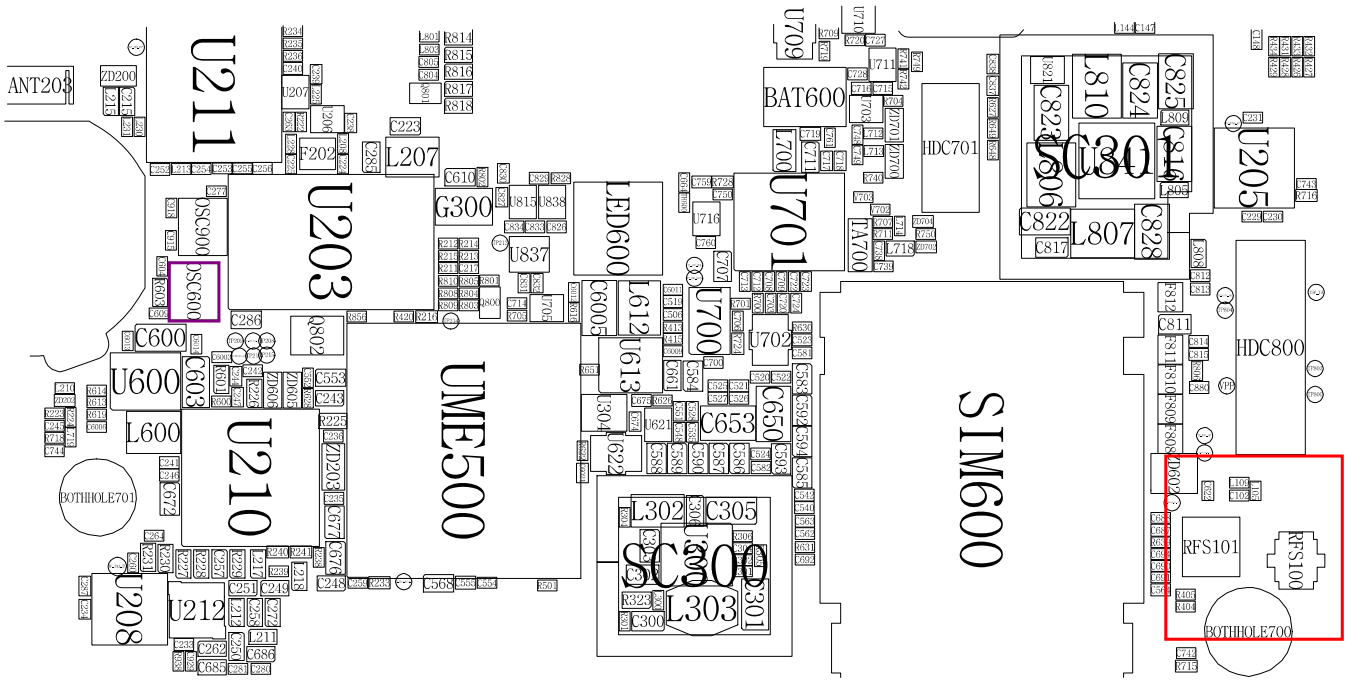

Confidential and proprietary-the contents in this service guide subject to change without prior notice.
Distribution, transmission, or infringement of any content or data from this document without Samsung's written authorization is strictly prohibited.

8-3-26.LTE Band21 接收器

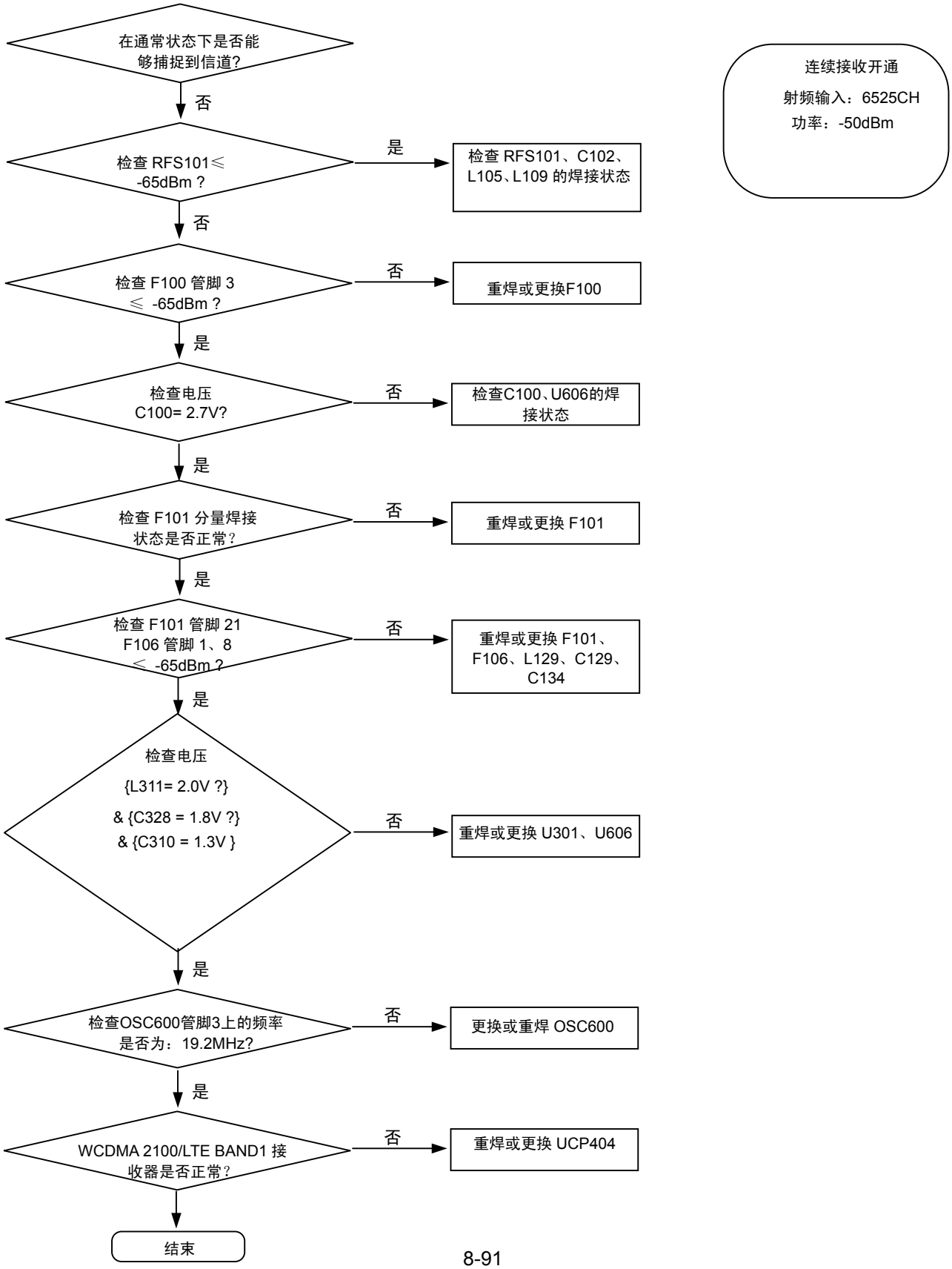

保密和所有权-本维修手册内容的变更恕不另行通知。
未经三星书面授权而发布，传送，或违背本文件中的任何内容或数据是严格禁止的。

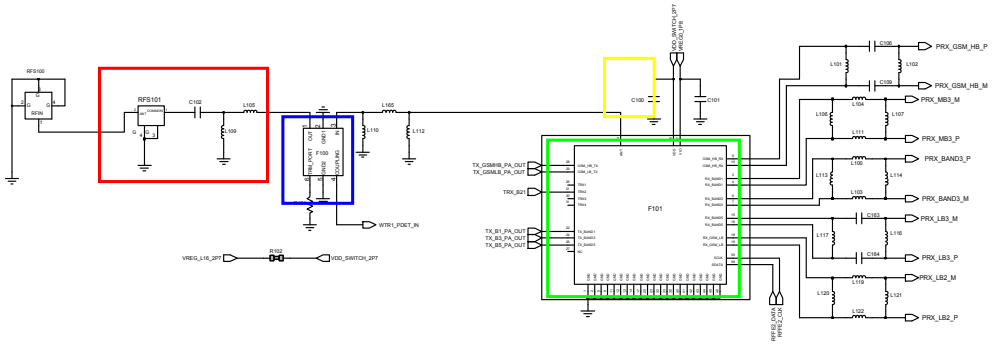

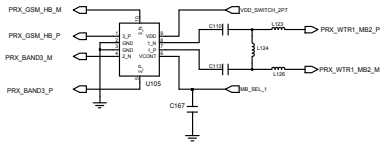

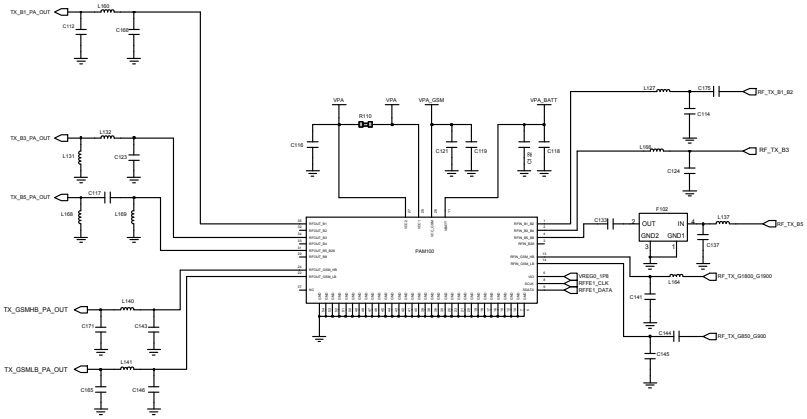

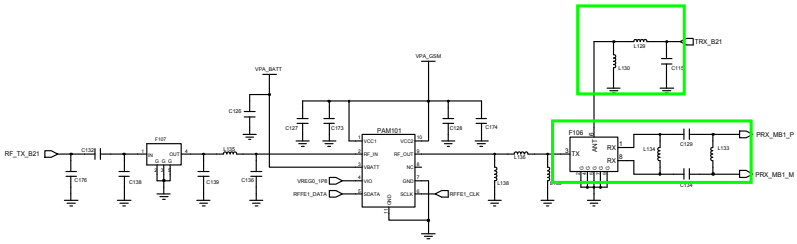

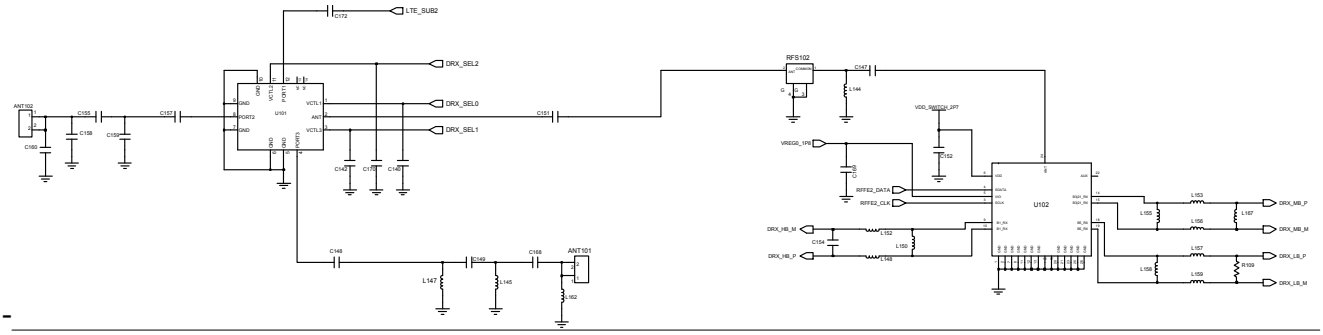

Confidential and proprietary-the contents in this service guide subject to change without prior notice.
Distribution, transmission, or infringement of any content or data from this document without Samsung's written authorization is strictly prohibited.

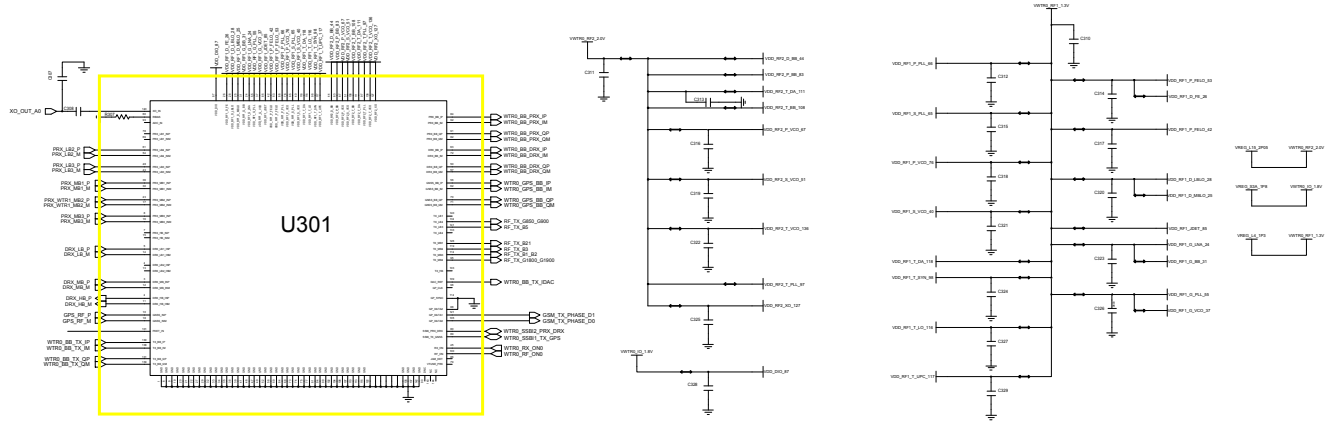

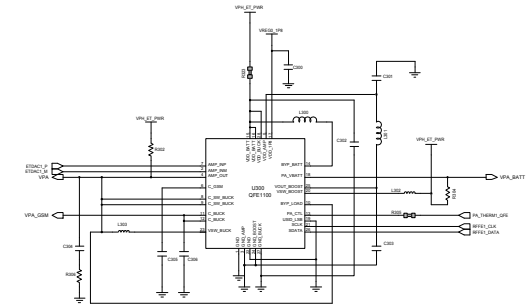

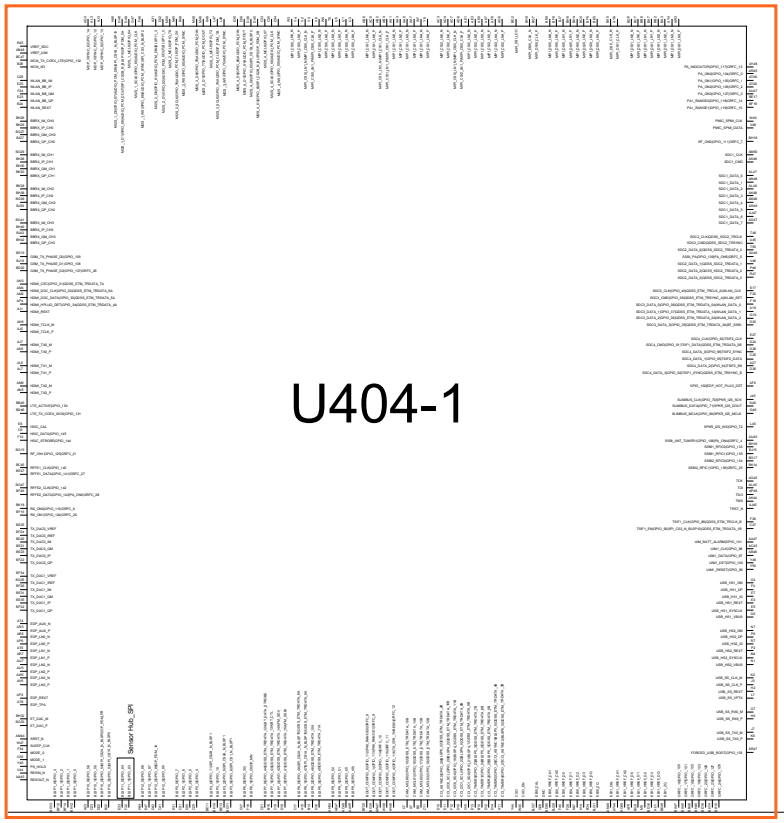

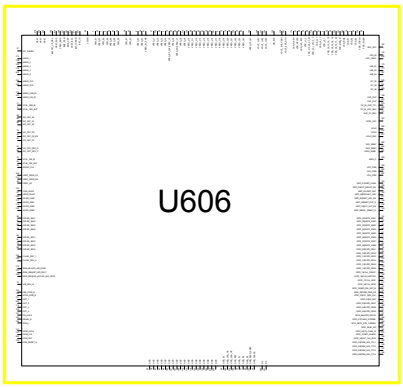

Confidential and proprietary-the contents in this service guide subject to change without prior notice.
Distribution, transmission, or infringement of any content or data from this document without Samsung's written authorization is strictly prohibited.

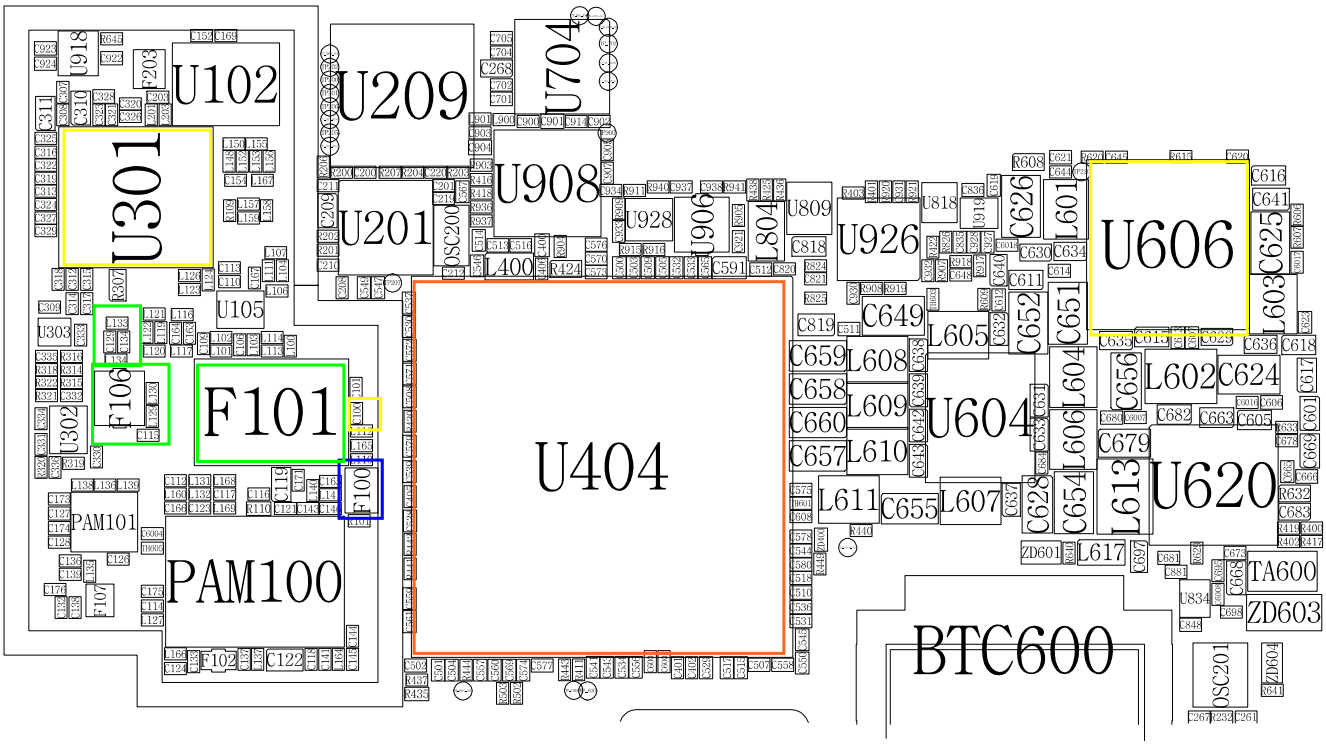

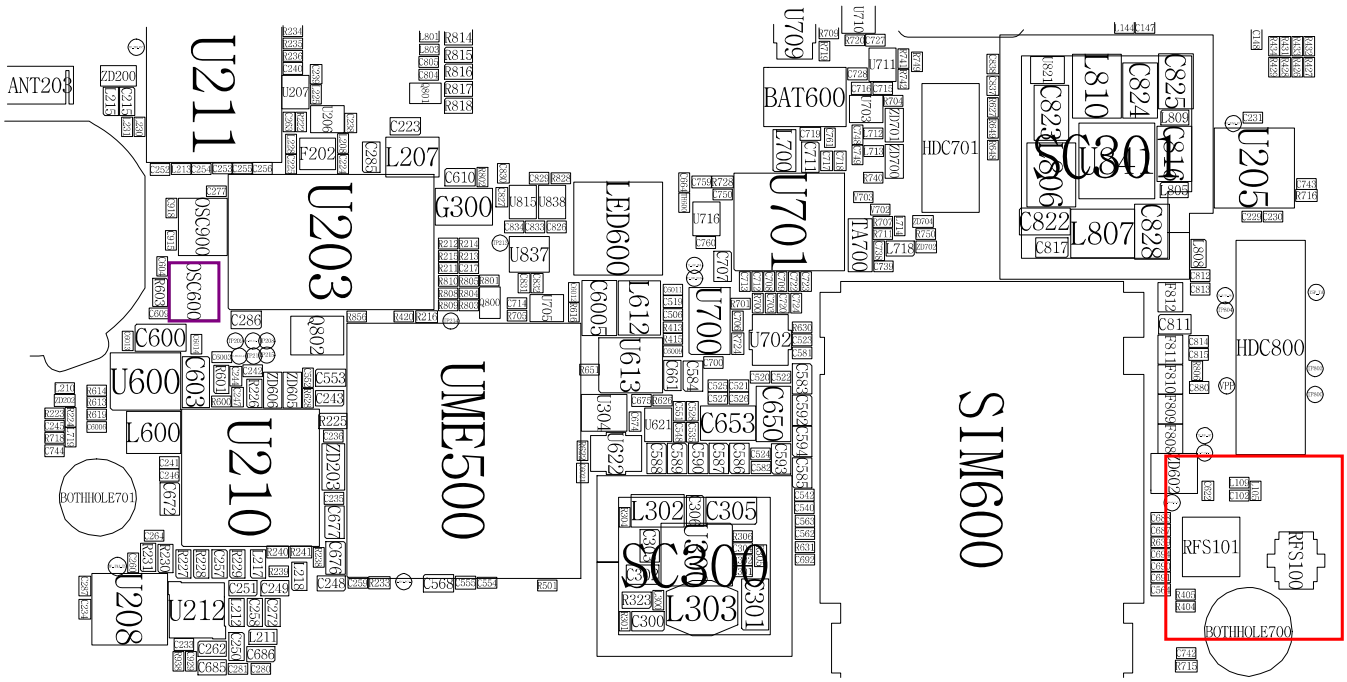

Confidential and proprietary-the contents in this service guide subject to change without prior notice.
Distribution, transmission, or infringement of any content or data from this document without Samsung's written authorization is strictly prohibited.

8-3-27.GSM850/GSM900 发射器

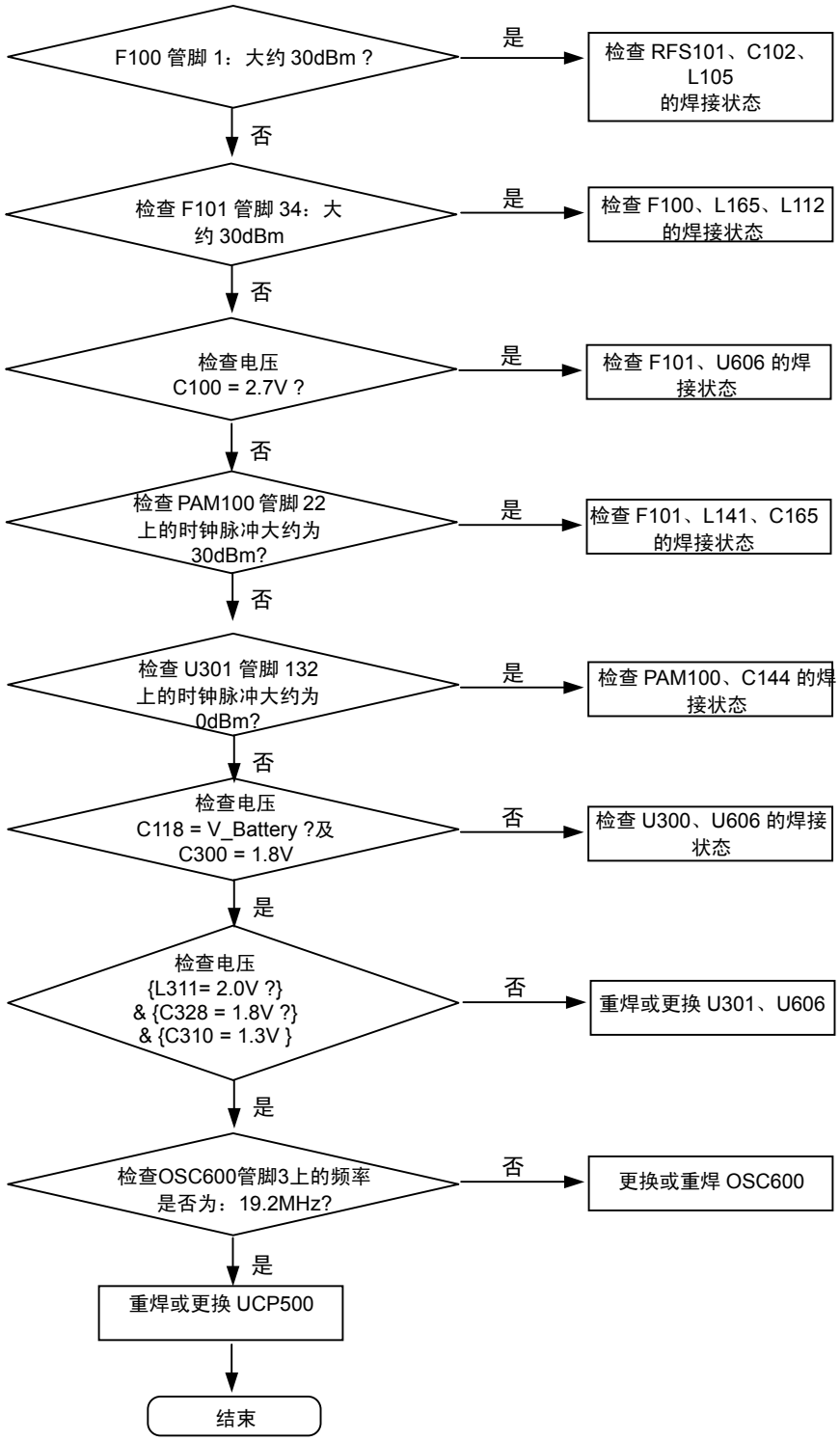

持续发射开通条件
DAC 发射功率：应用代码 14500
GSM850 CH：190
GSM900 CH：37
RBW：100KHz
VBW：100KHz
SPAN：10MHz
REF LEV.：10dBm
ATT.：20dB

保密和所有权-本维修手册内容的变更恕不另行通知。
未经三星书面授权而发布，传送，或违背本文件中的任何内容或数据是严格禁止的。

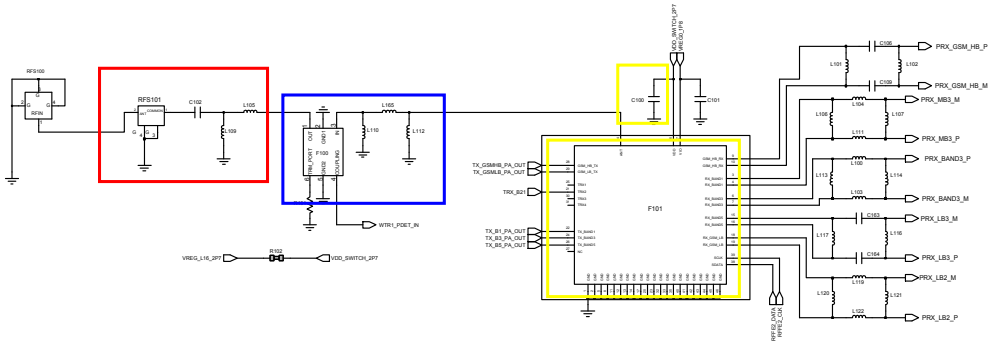

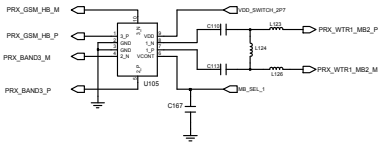

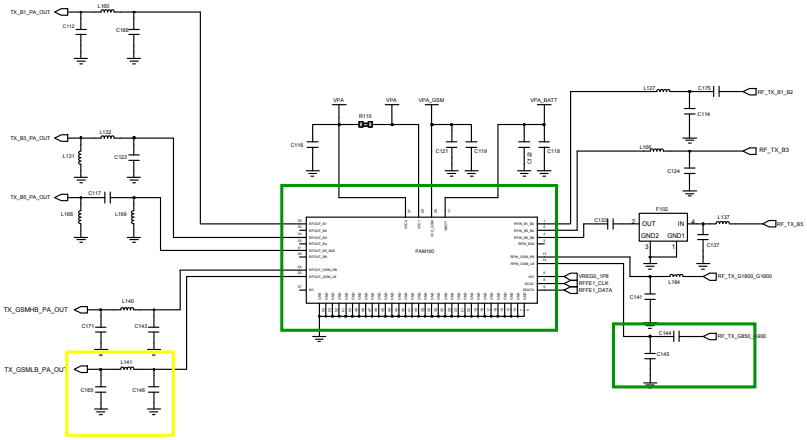

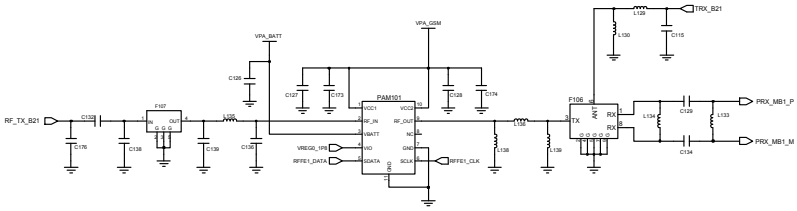

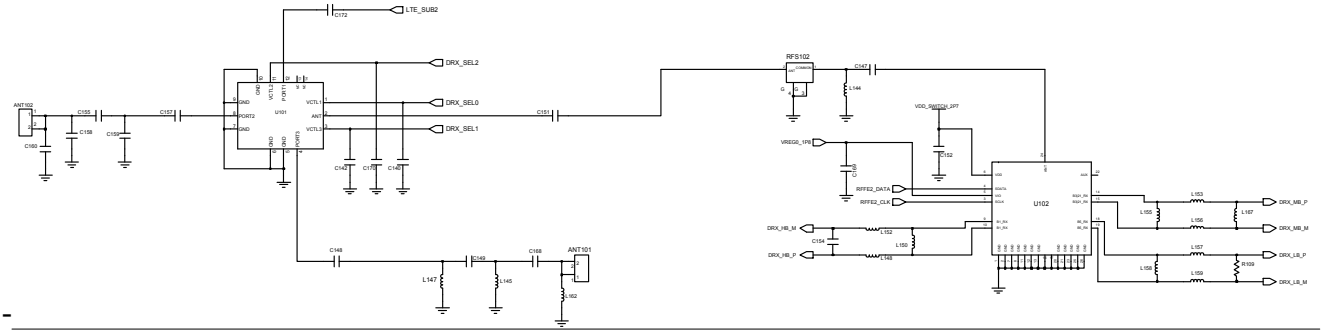

Confidential and proprietary-the contents in this service guide subject to change without prior notice.
Distribution, transmission, or infringement of any content or data from this document without Samsung's written authorization is strictly prohibited.

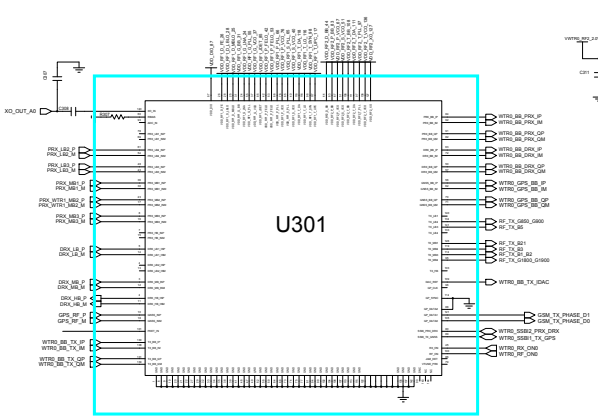

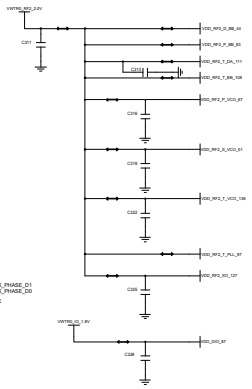

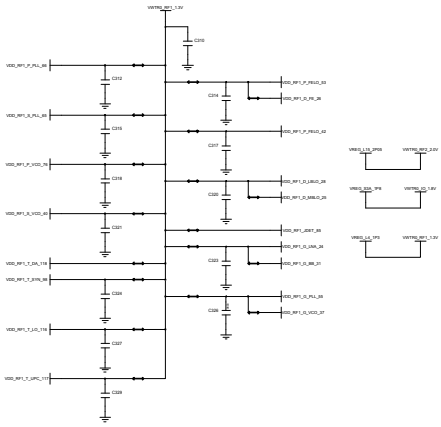

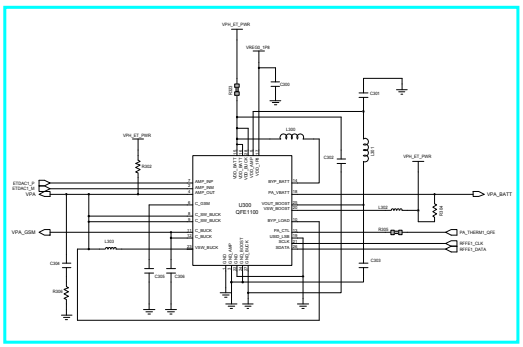

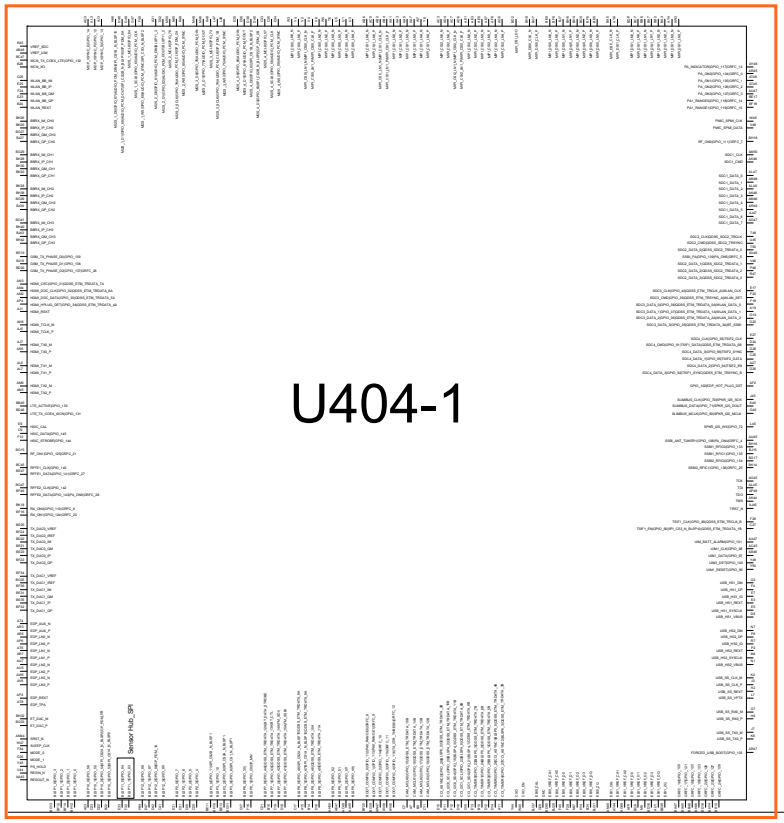

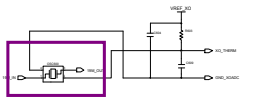

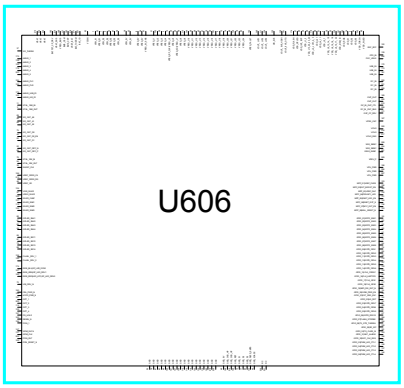

Confidential and proprietary-the contents in this service guide subject to change without prior notice.
Distribution, transmission, or infringement of any content or data from this document without Samsung's written authorization is strictly prohibited.

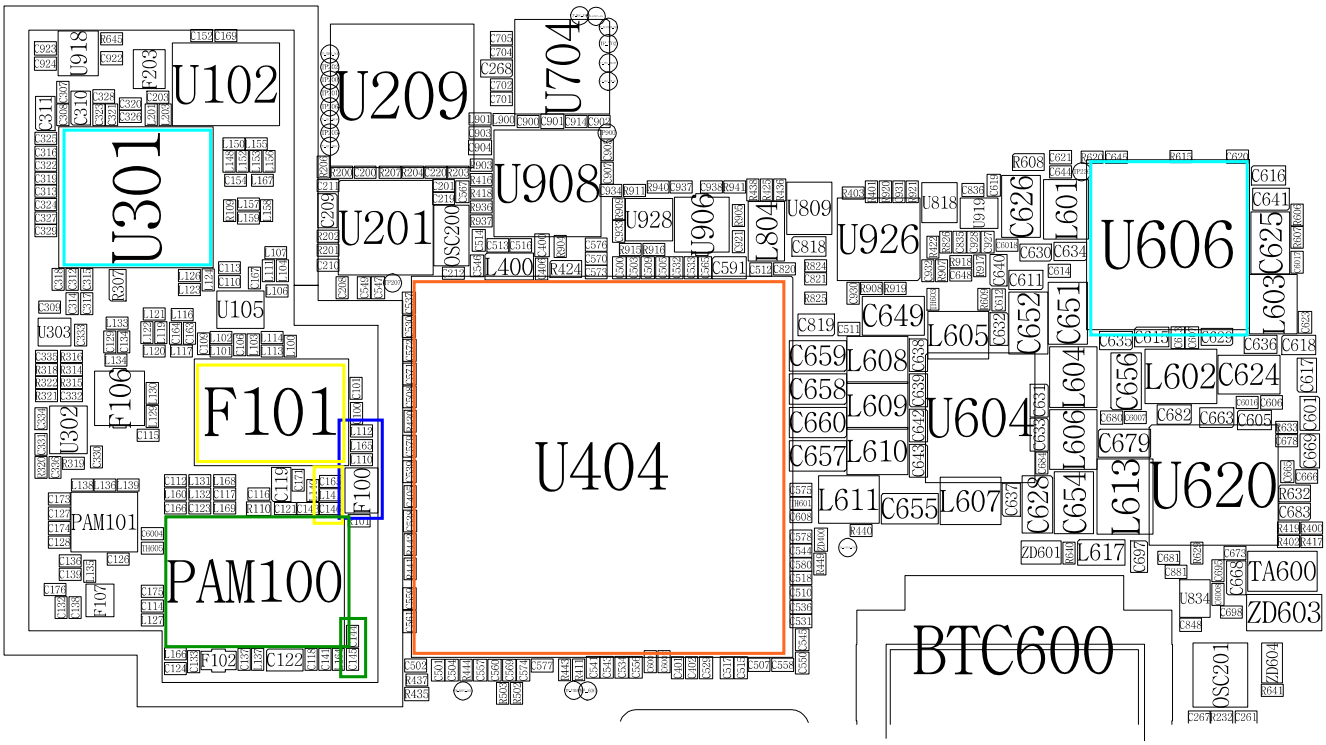

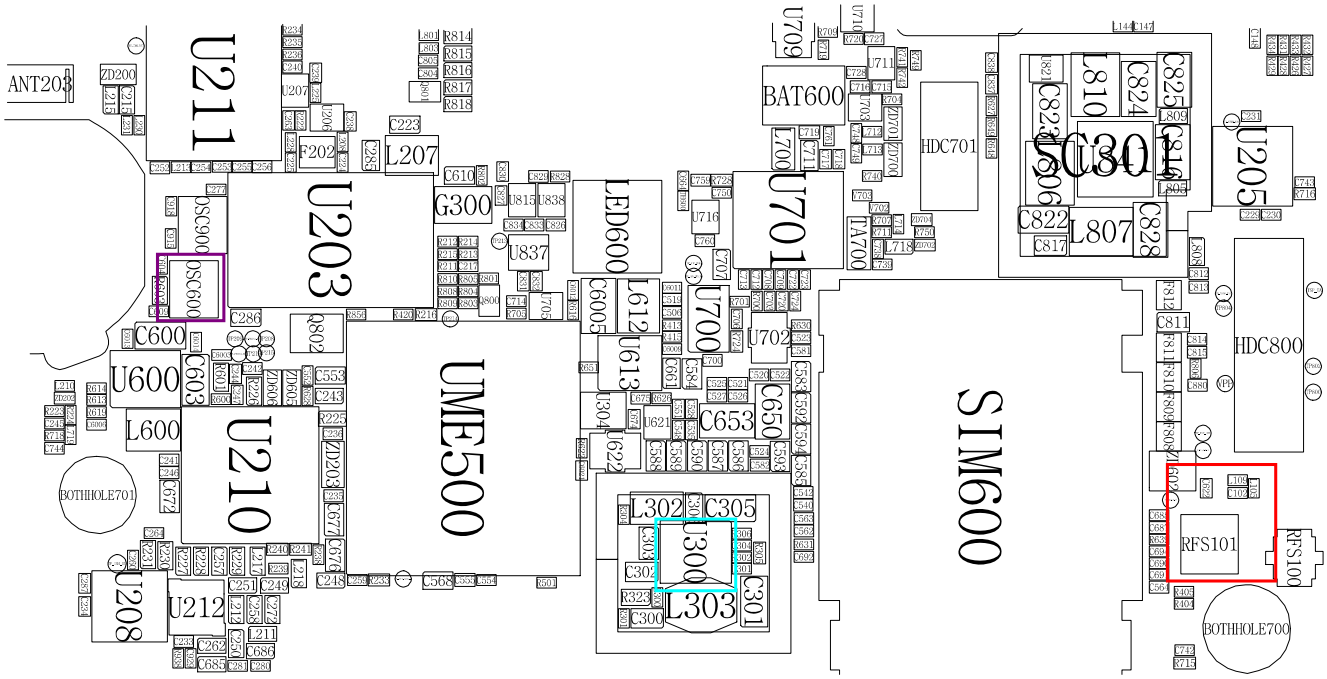

Confidential and proprietary-the contents in this service guide subject to change without prior notice.
Distribution, transmission, or infringement of any content or data from this document without Samsung's written authorization is strictly prohibited.

8-3-28.GSM1800/1900 发射器

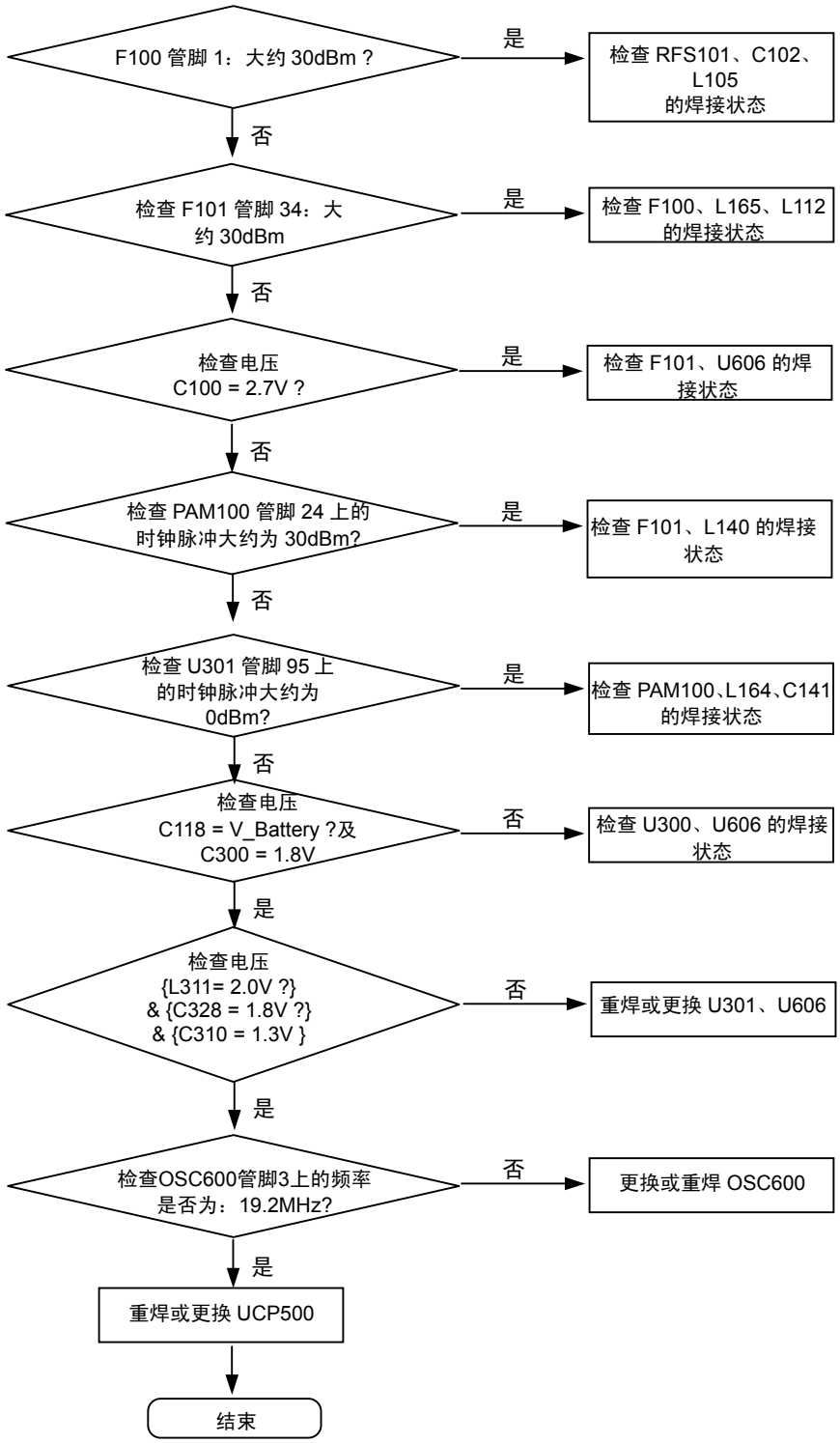

持续发射开通条件
IDX1 发射功率：应用代码
GSM1800 CH：698
GSM1900 CH：661
RBW：100KHz
VBW：100KHz
SPAN：10MHz
REF LEV.：10dBm
ATT.：20dB

保密和所有权-本维修手册内容的变更恕不另行通知。
未经三星书面授权而发布，传送，或违背本文件中的任何内容或数据是严格禁止的。

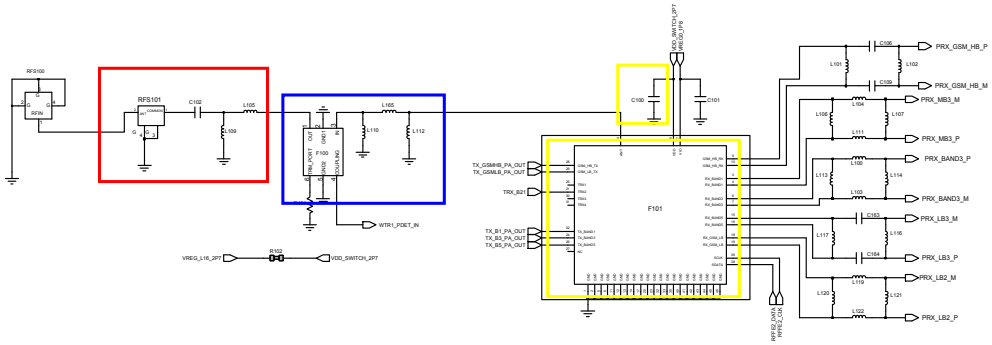

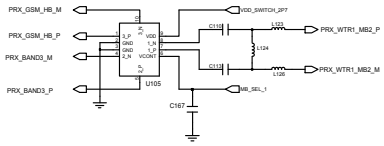

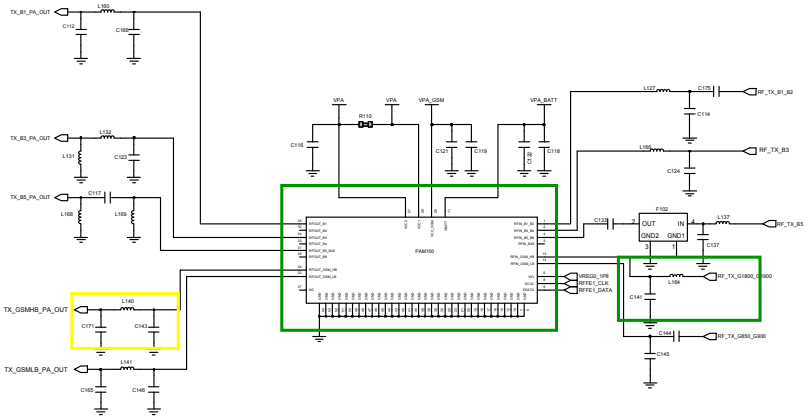

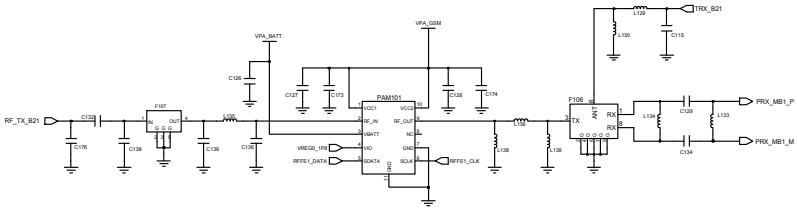

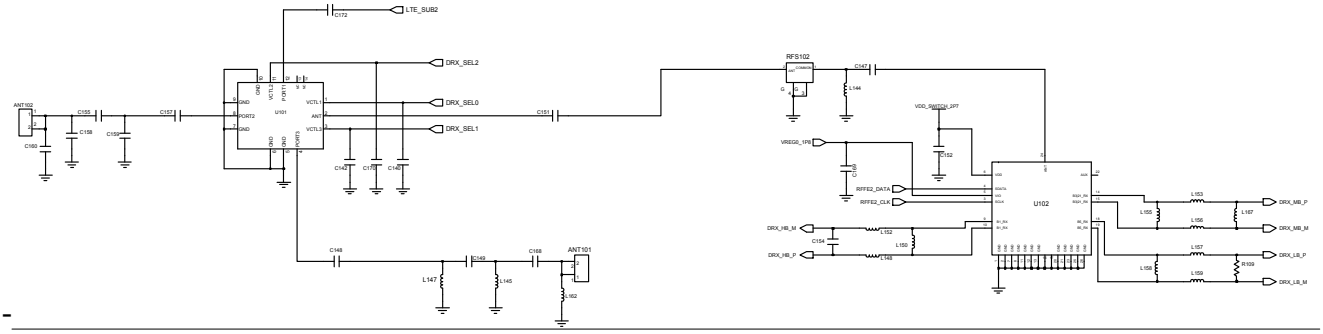

Confidential and proprietary-the contents in this service guide subject to change without prior notice.
Distribution, transmission, or infringement of any content or data from this document without Samsung's written authorization is strictly prohibited.

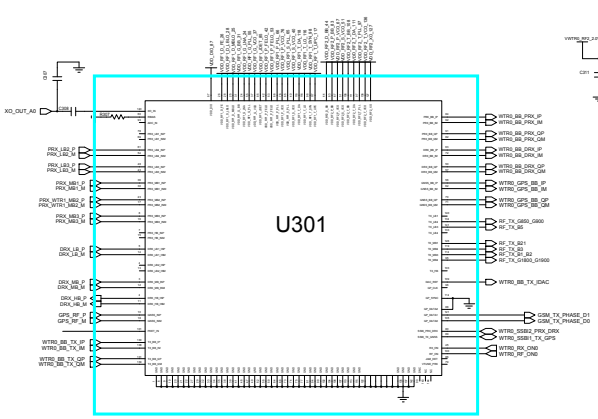

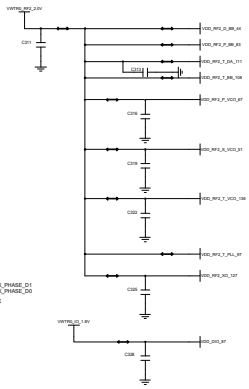

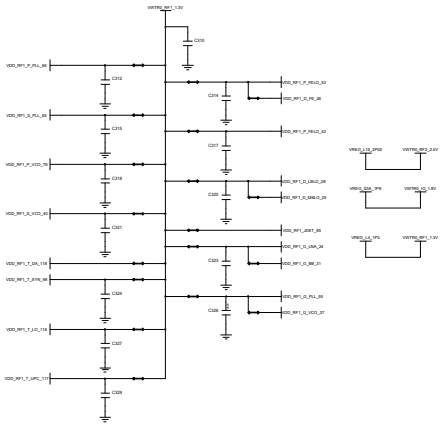

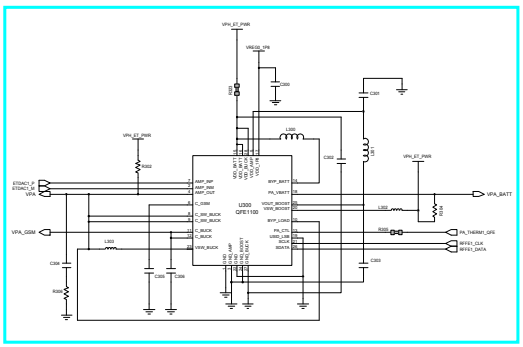

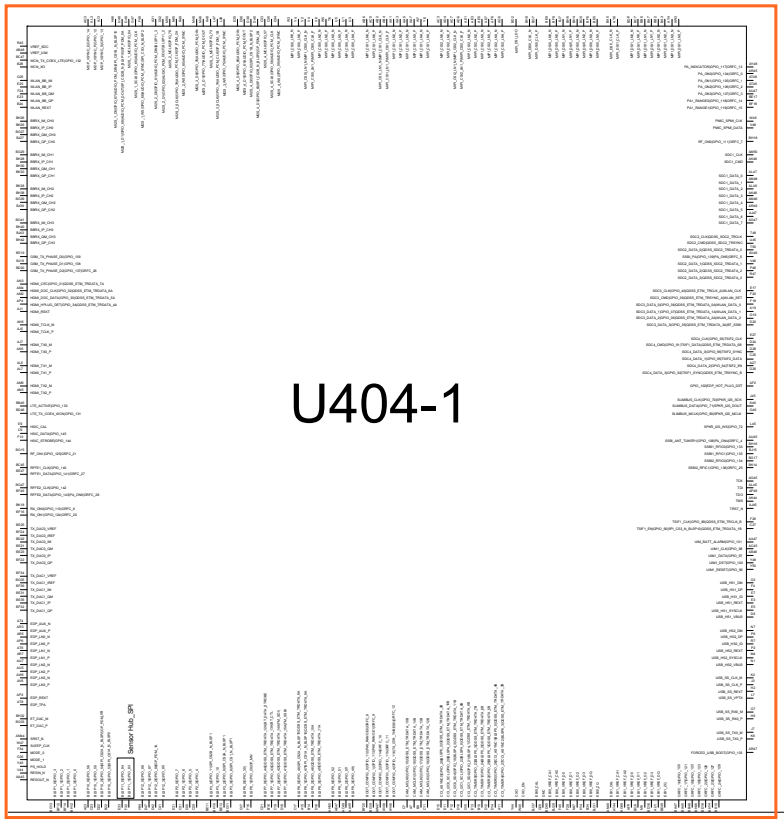

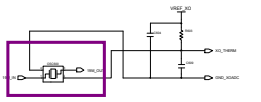

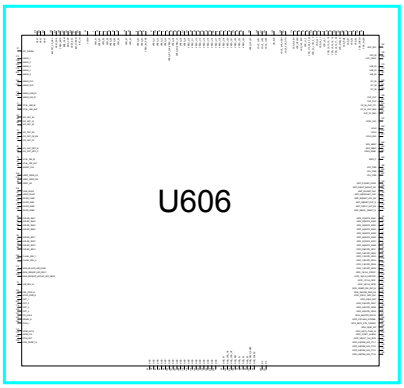

Confidential and proprietary-the contents in this service guide subject to change without prior notice.
Distribution, transmission, or infringement of any content or data from this document without Samsung's written authorization is strictly prohibited.

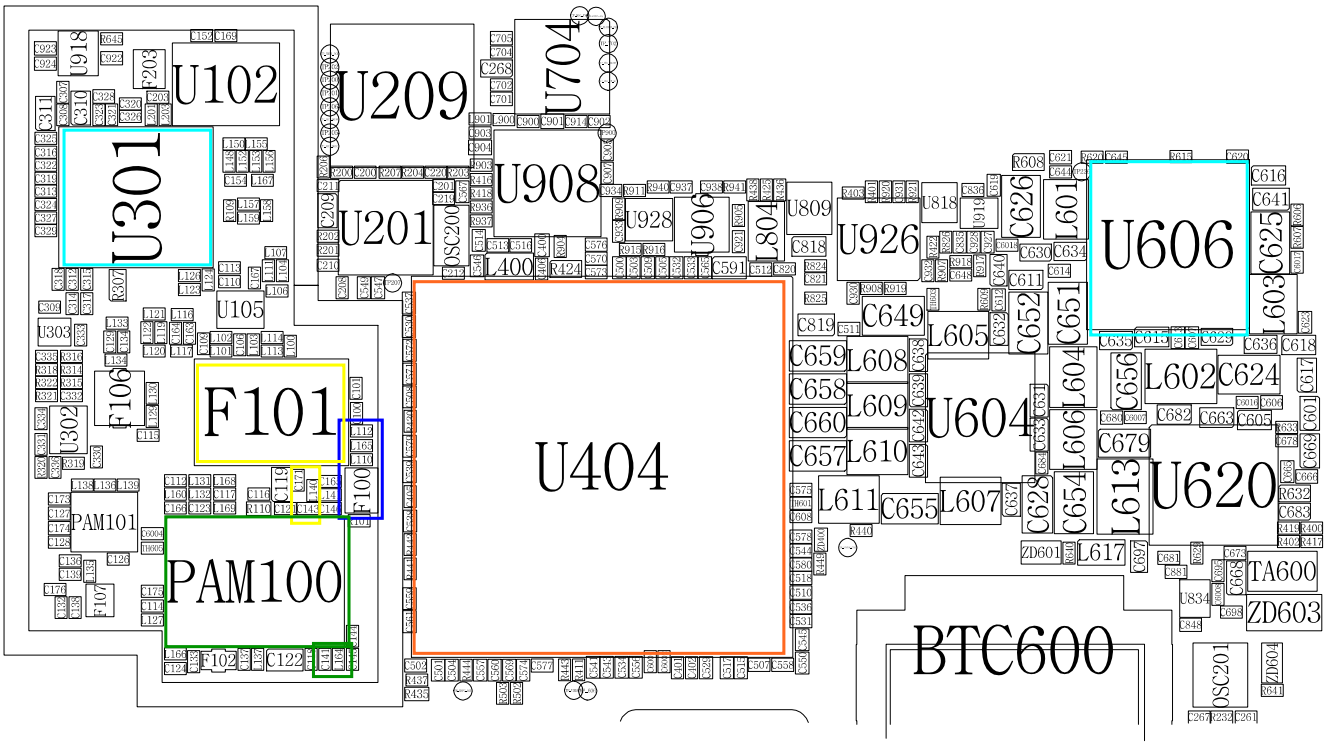

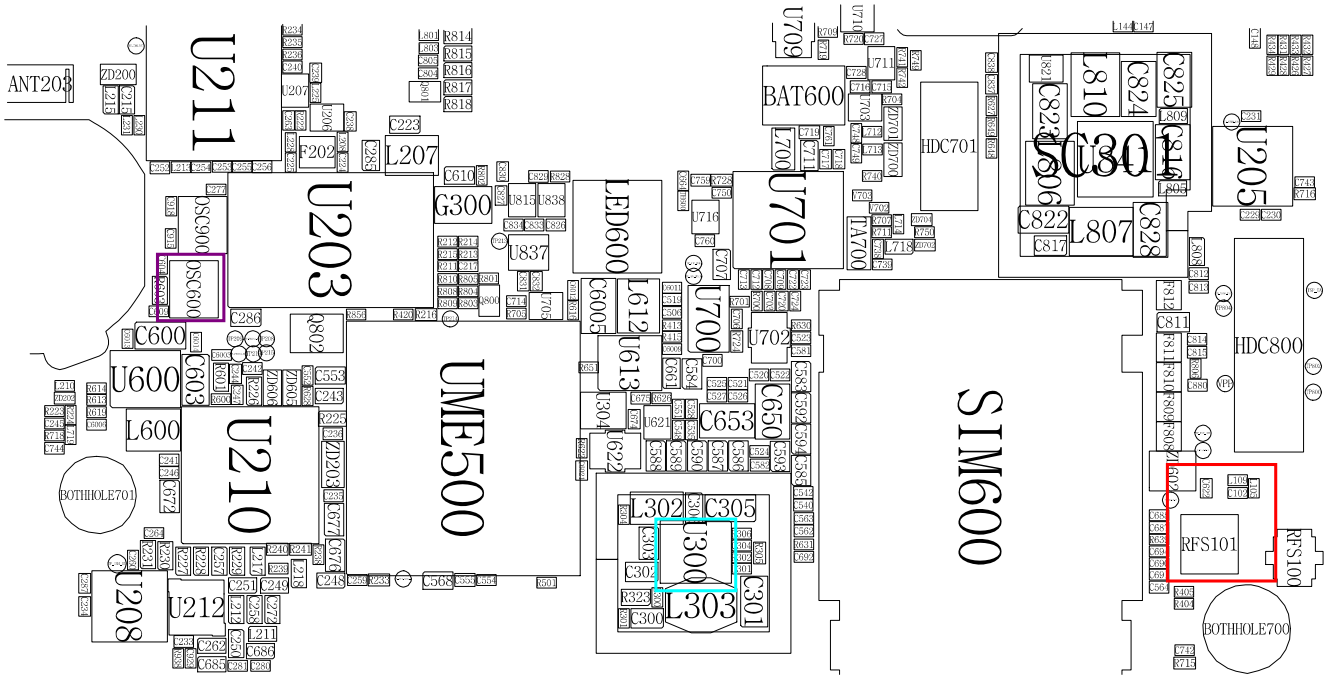

Confidential and proprietary-the contents in this service guide subject to change without prior notice.
Distribution, transmission, or infringement of any content or data from this document without Samsung's written authorization is strictly prohibited.

8-3-29.WCDMA 2100/LTE Band1 发射器

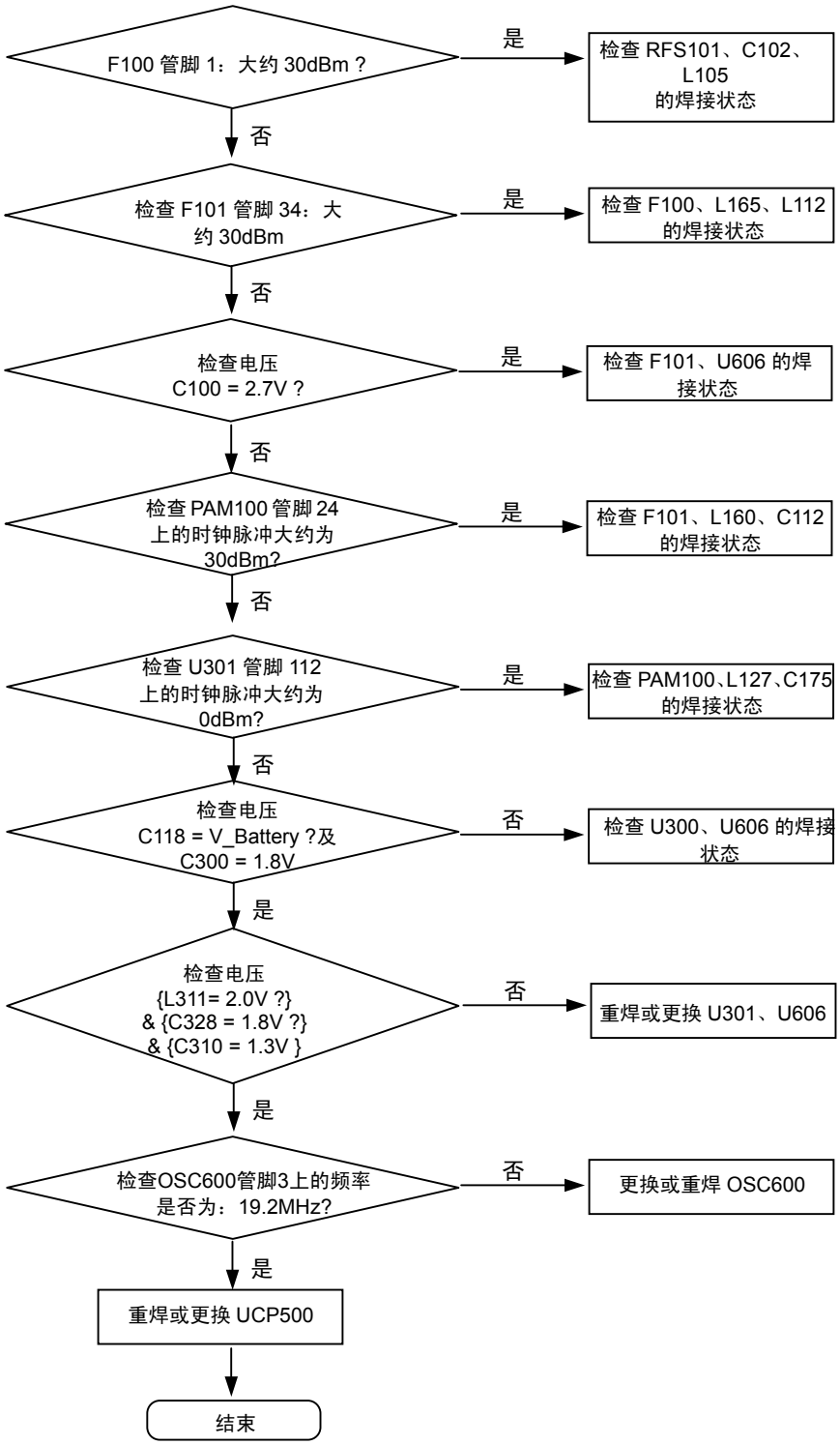

持续发射开通条件
IDX1 发射功率：应用代码
WCDMA 2100 CH：10700
LTE Band1 CH：300
RBW：100KHz
VBW：100KHz
SPAN：10MHz
REF LEV.：10dBm
ATT.：20dB

保密和所有权-本维修手册内容的变更恕不另行通知。
未经三星书面授权而发布，传送，或违背本文件中的任何内容或数据是严格禁止的。

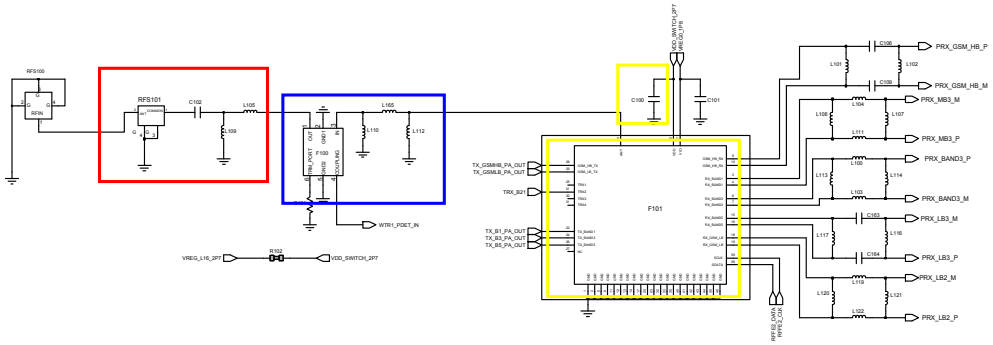

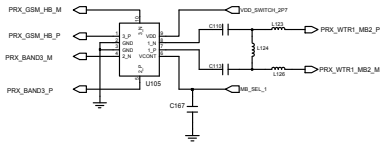

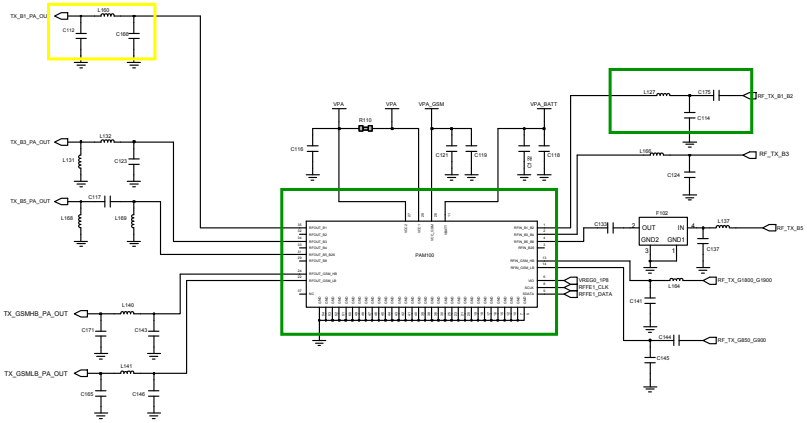

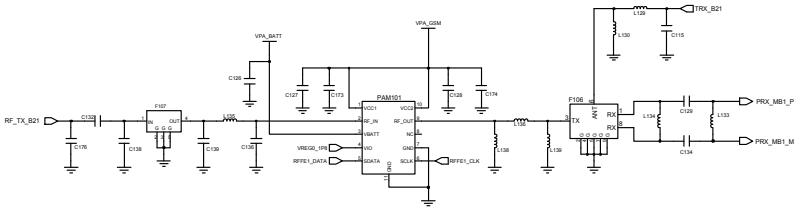

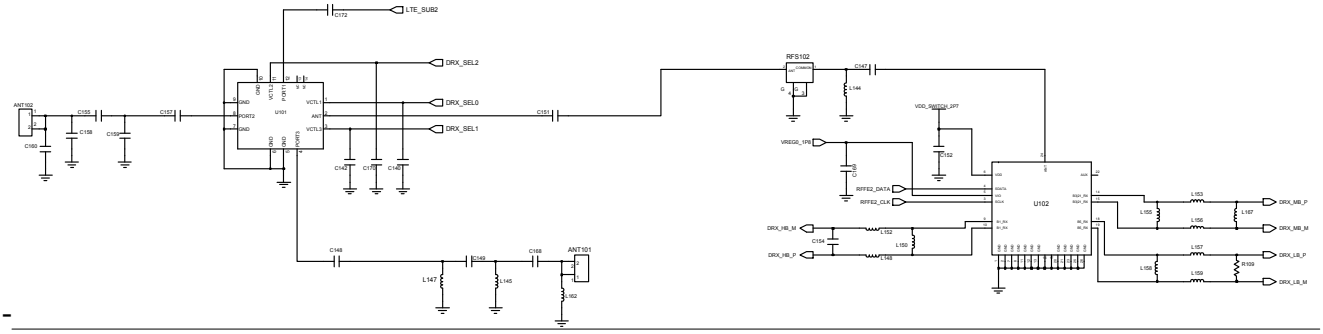

Confidential and proprietary-the contents in this service guide subject to change without prior notice.
Distribution, transmission, or infringement of any content or data from this document without Samsung's written authorization is strictly prohibited.

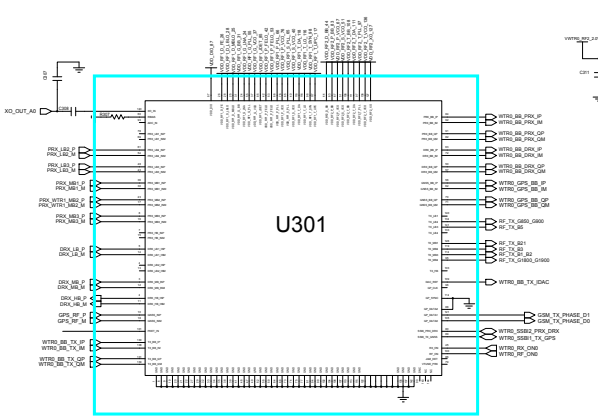

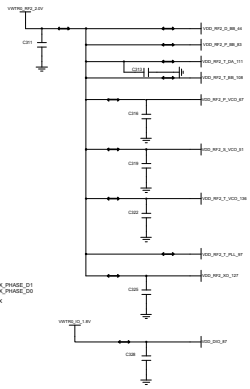

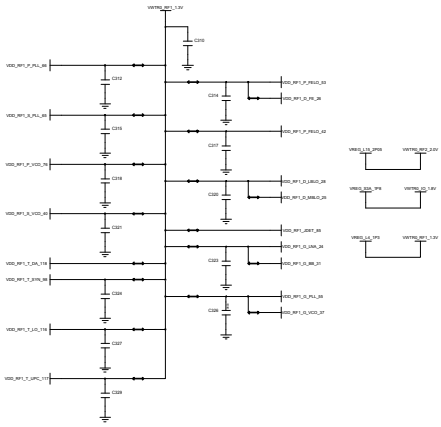

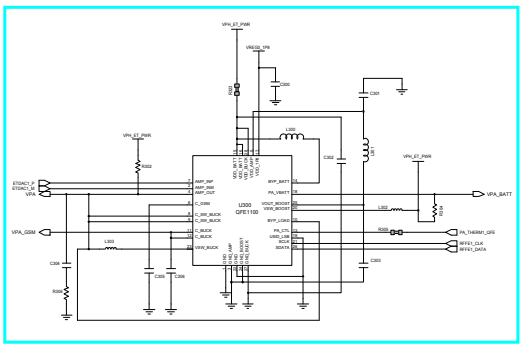

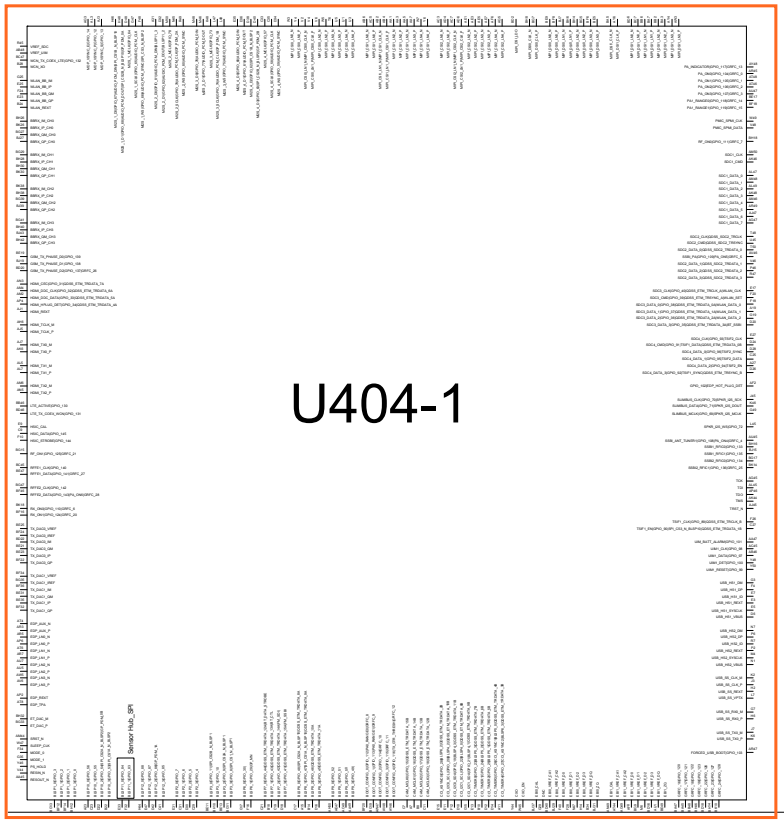

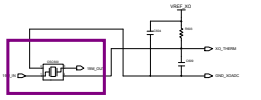

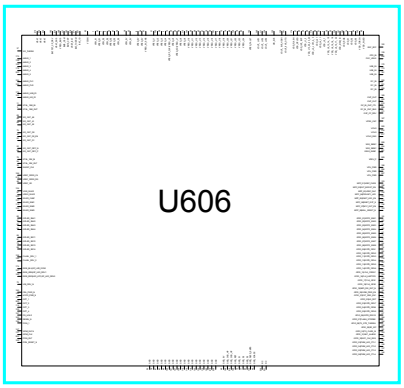

Confidential and proprietary-the contents in this service guide subject to change without prior notice.
Distribution, transmission, or infringement of any content or data from this document without Samsung's written authorization is strictly prohibited.

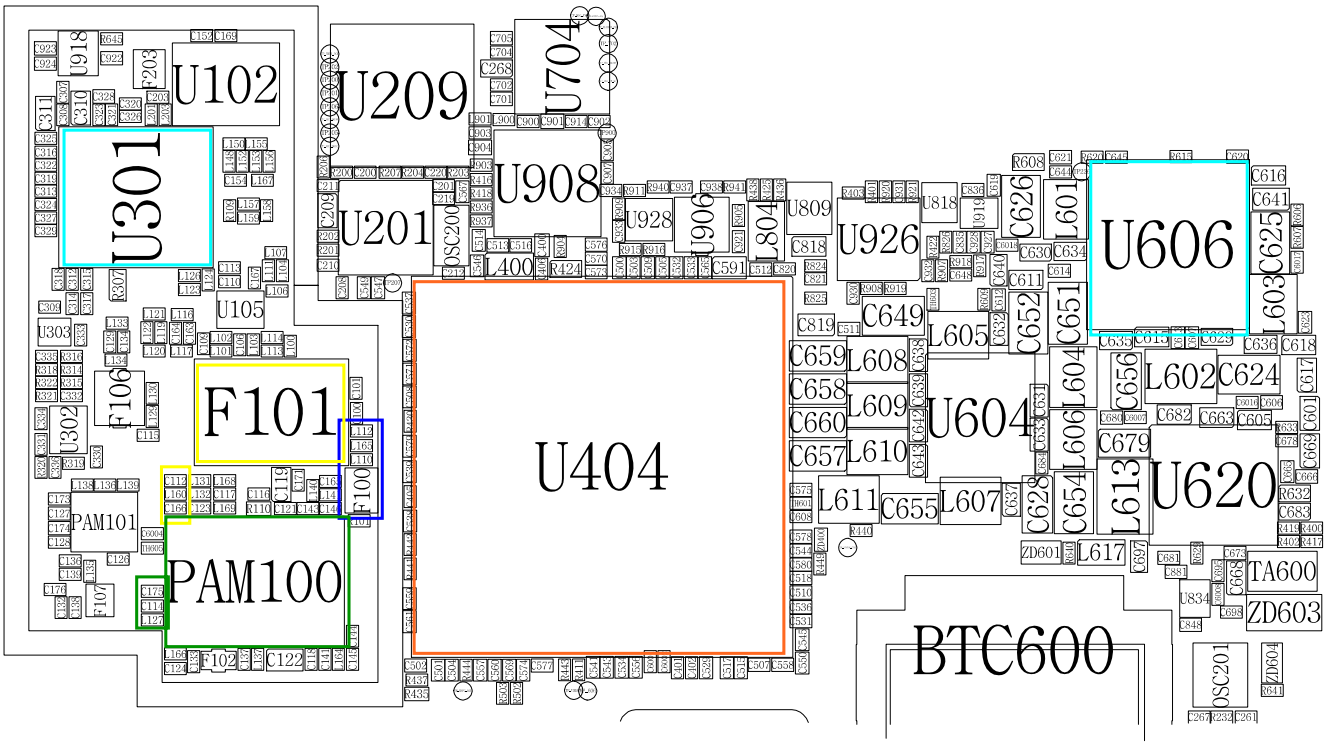

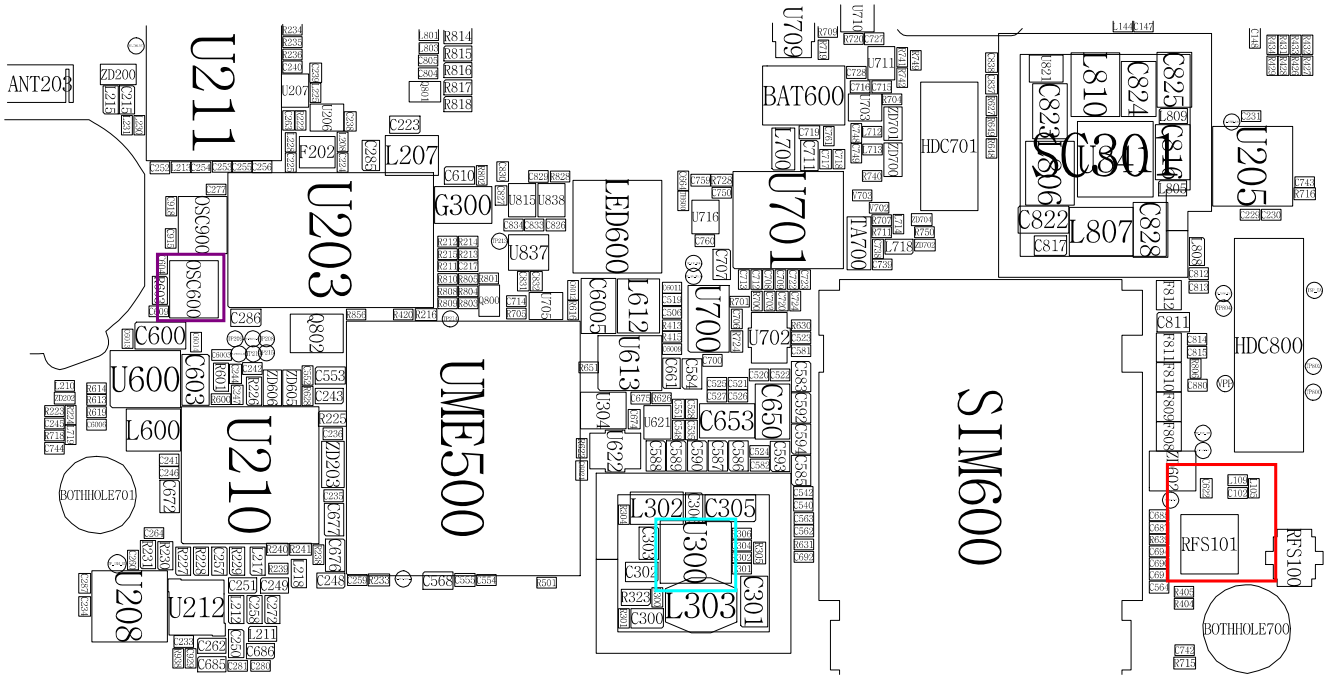

Confidential and proprietary-the contents in this service guide subject to change without prior notice.
Distribution, transmission, or infringement of any content or data from this document without Samsung's written authorization is strictly prohibited.

8-3-30.WCDMA800/850/NEW800/LTE Band19 发射器

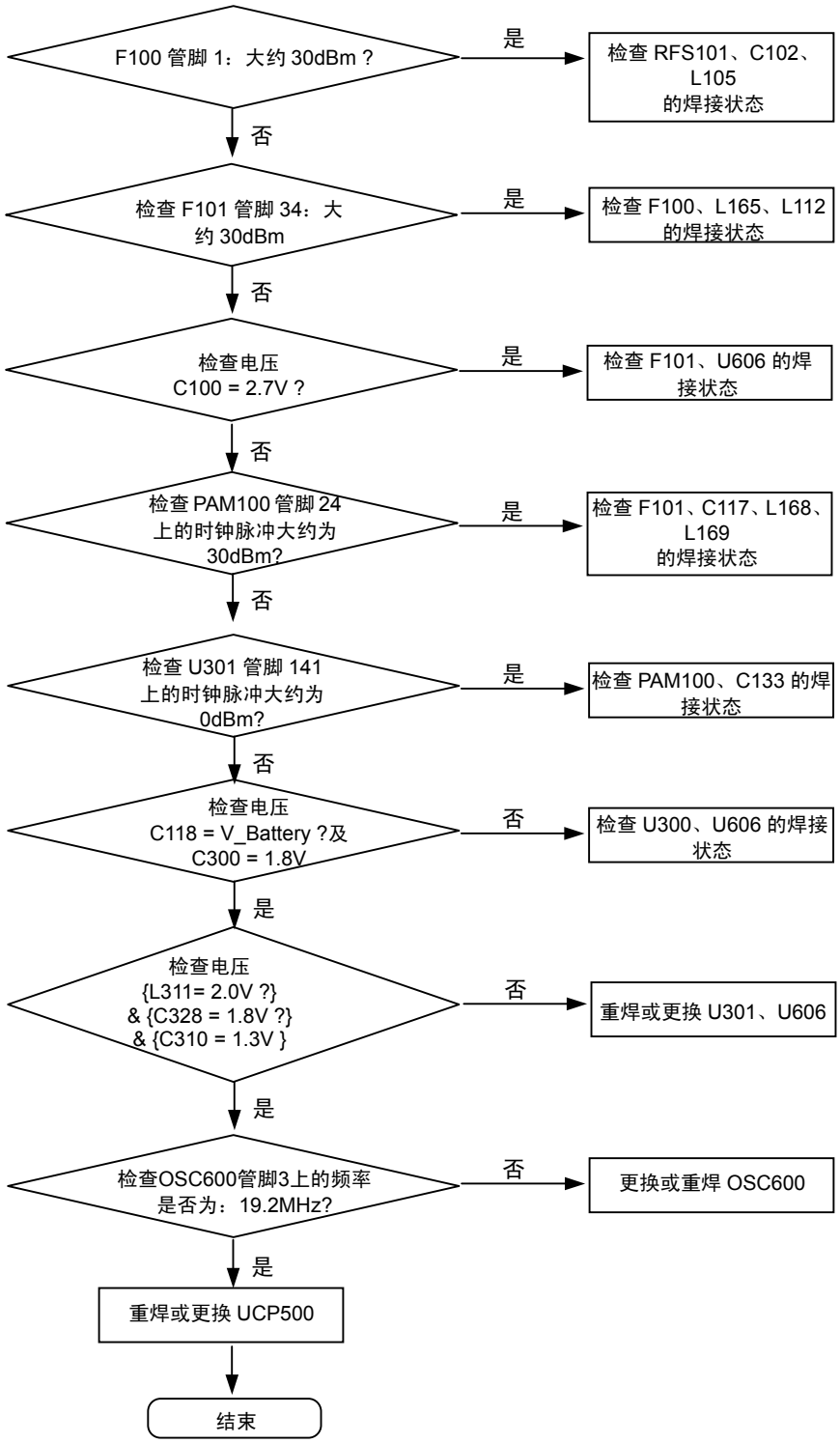

持续发射开通条件
IDX1 发射功率：应用代码
WCDMA 800 CH：4400
LTE Band 19 CH：6075
RBW：100KHz
VBW：100KHz
SPAN：10MHz
REF LEV.：10dBm
ATT.：20dB

保密和所有权-本维修手册内容的变更恕不另行通知。
未经三星书面授权而发布，传送，或违背本文件中的任何内容或数据是严格禁止的。

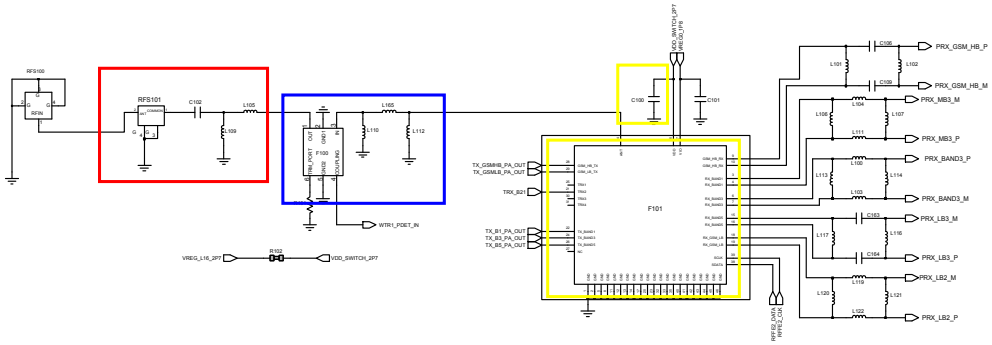

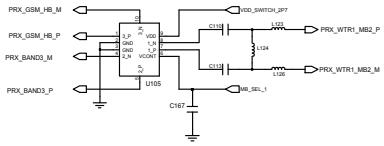

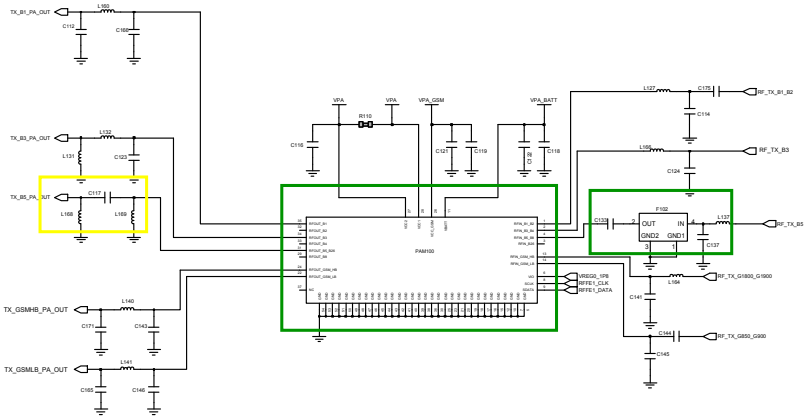

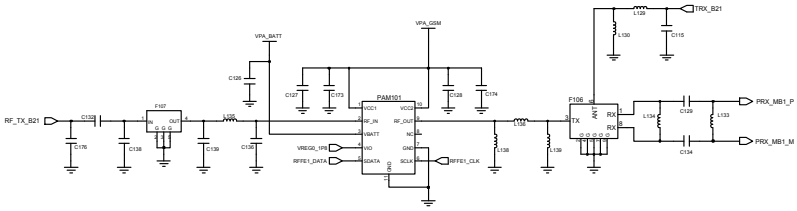

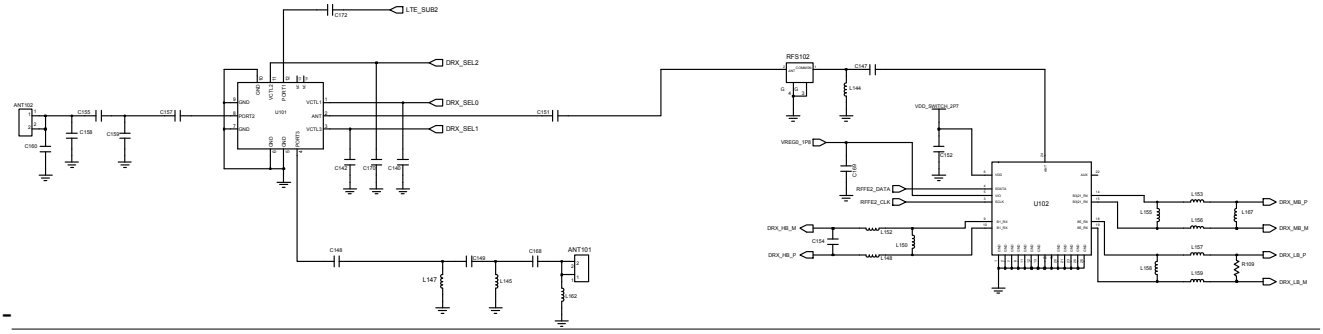

Confidential and proprietary-the contents in this service guide subject to change without prior notice.
Distribution, transmission, or infringement of any content or data from this document without Samsung's written authorization is strictly prohibited.

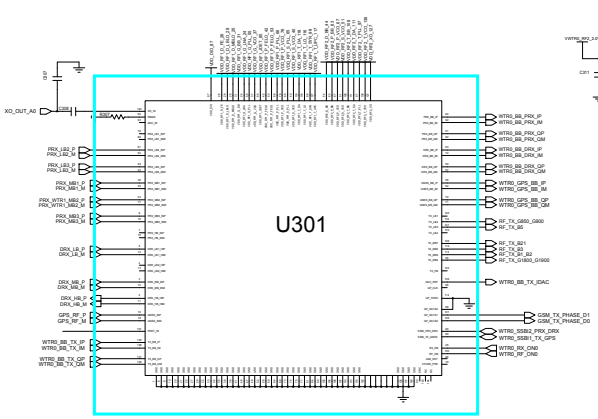

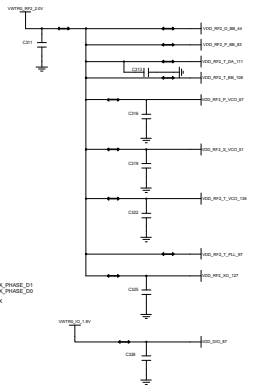

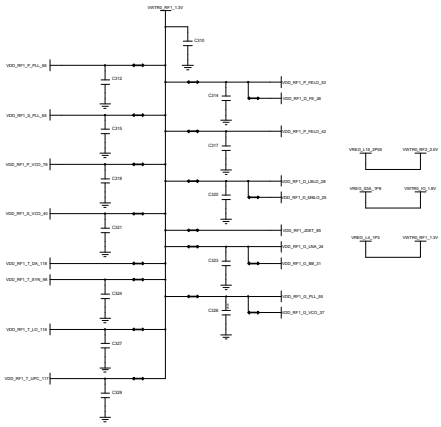

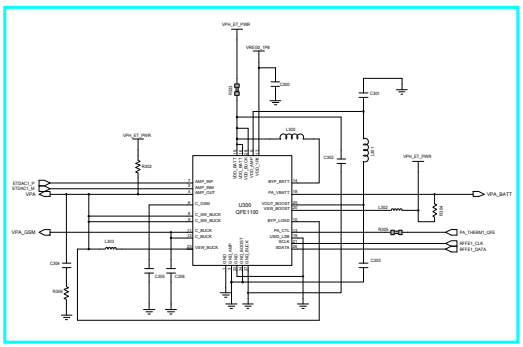

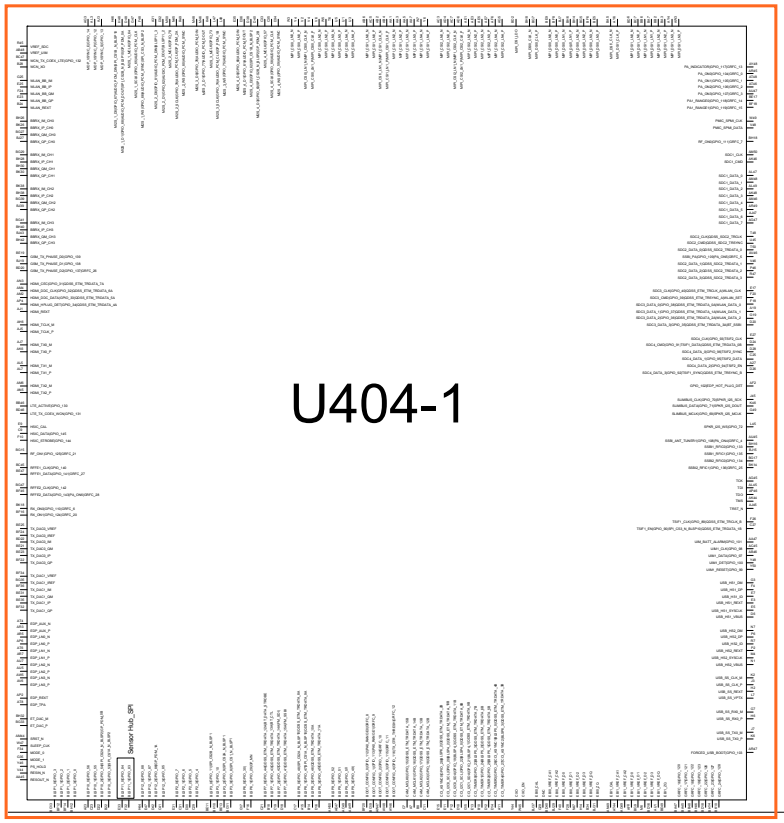

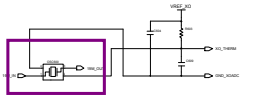

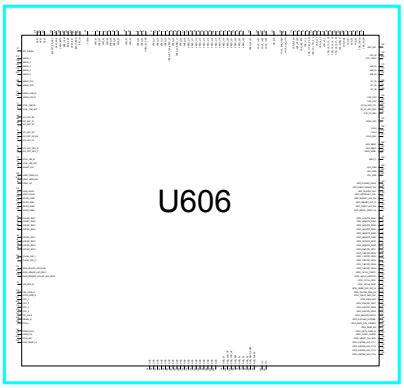

Confidential and proprietary-the contents in this service guide subject to change without prior notice.
Distribution, transmission, or infringement of any content or data from this document without Samsung's written authorization is strictly prohibited.

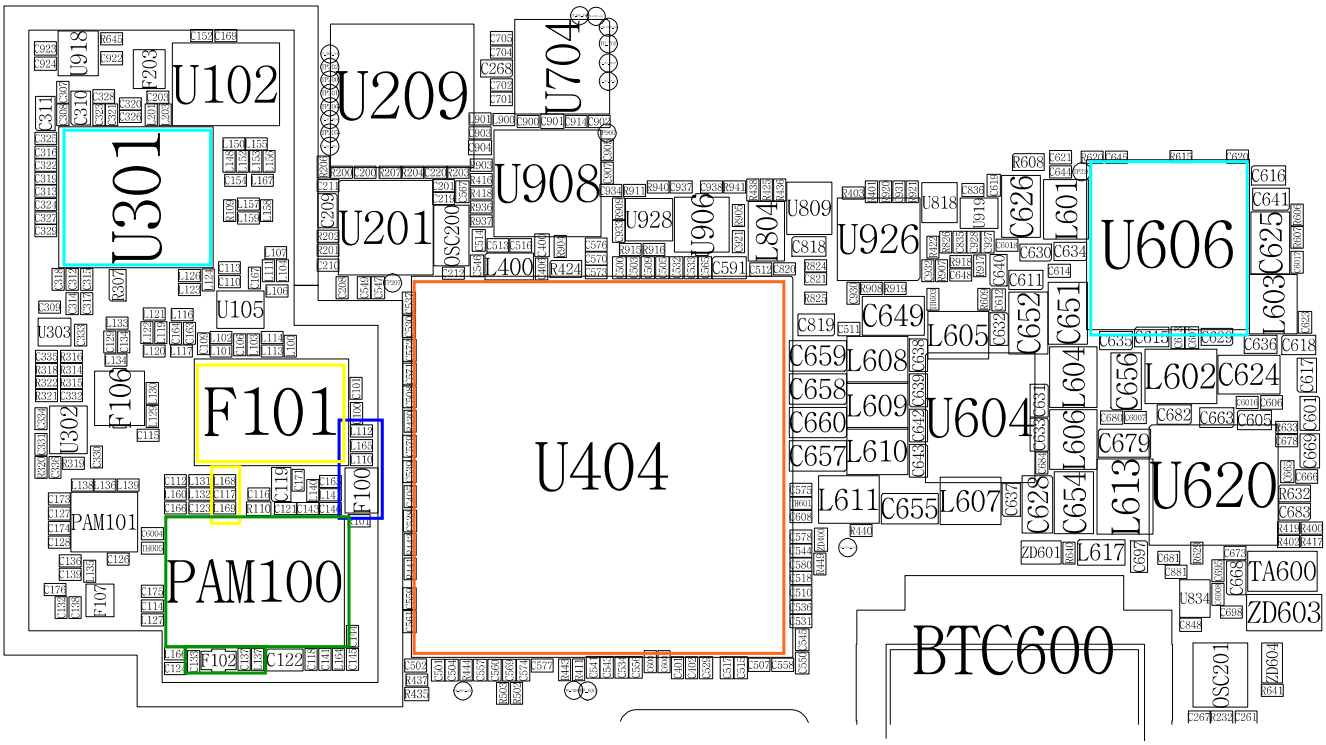

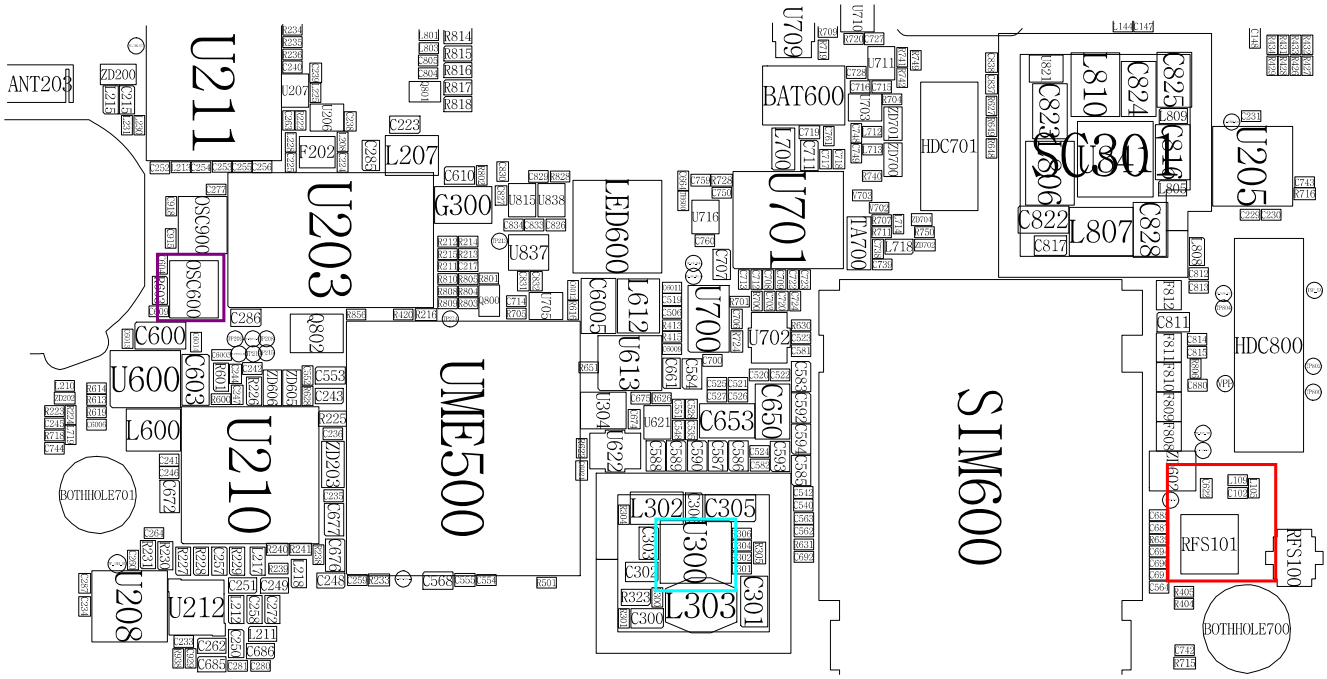

Confidential and proprietary-the contents in this service guide subject to change without prior notice.
Distribution, transmission, or infringement of any content or data from this document without Samsung's written authorization is strictly prohibited.

8-3-31.LTE Band3 发射器

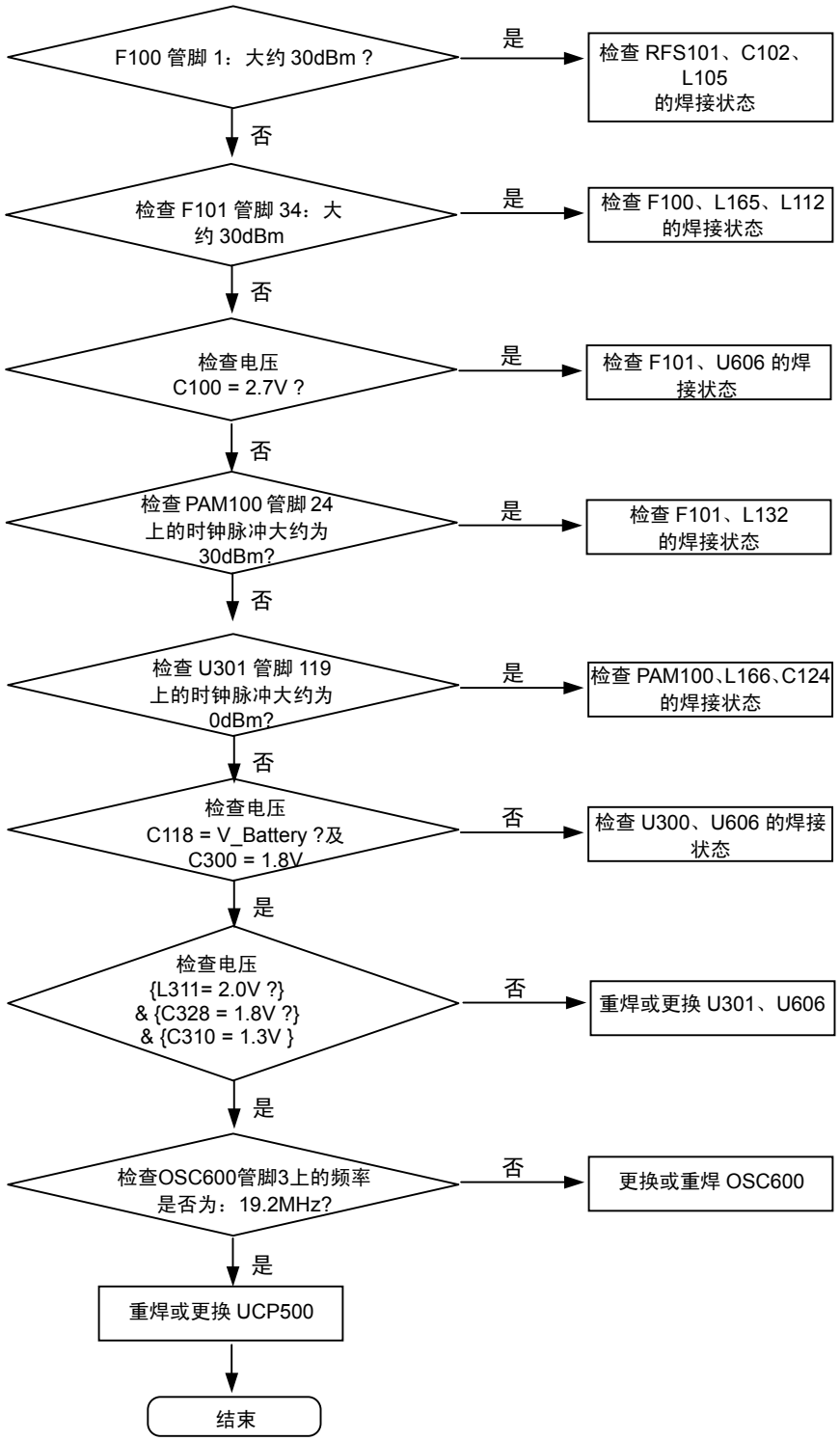

持续发射开通条件
IDX1 发射功率：应用代码
LTE Band 3 CH：1575
RBW：100KHz
VBW：100KHz
SPAN：10MHz
REF LEV.：10dBm
ATT.：20dB

保密和所有权-本维修手册内容的变更恕不另行通知。
未经三星书面授权而发布，传送，或违背本文件中的任何内容或数据是严格禁止的。

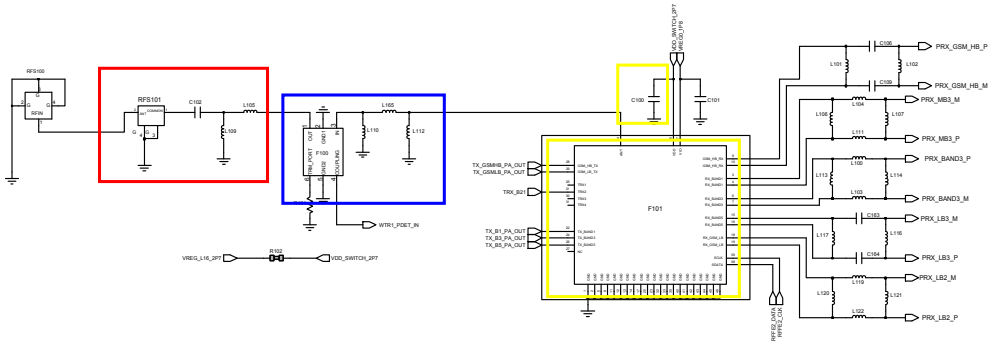

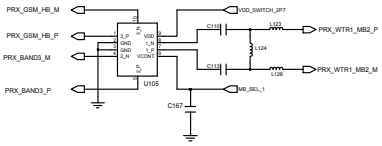

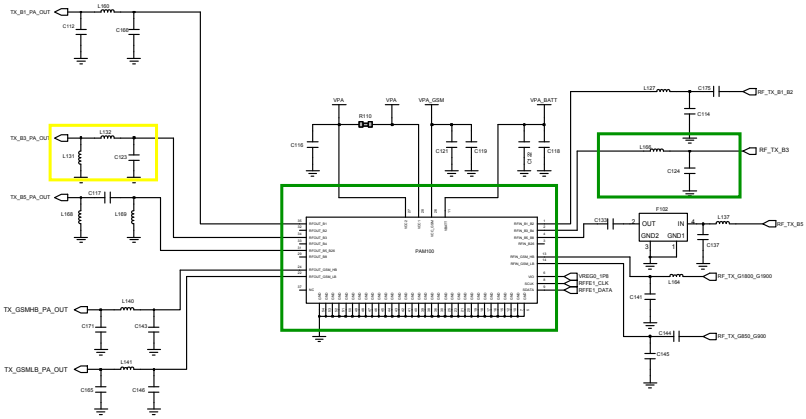

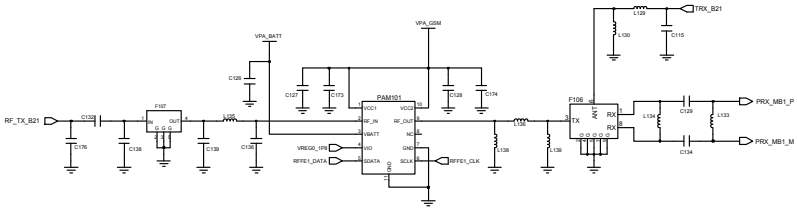

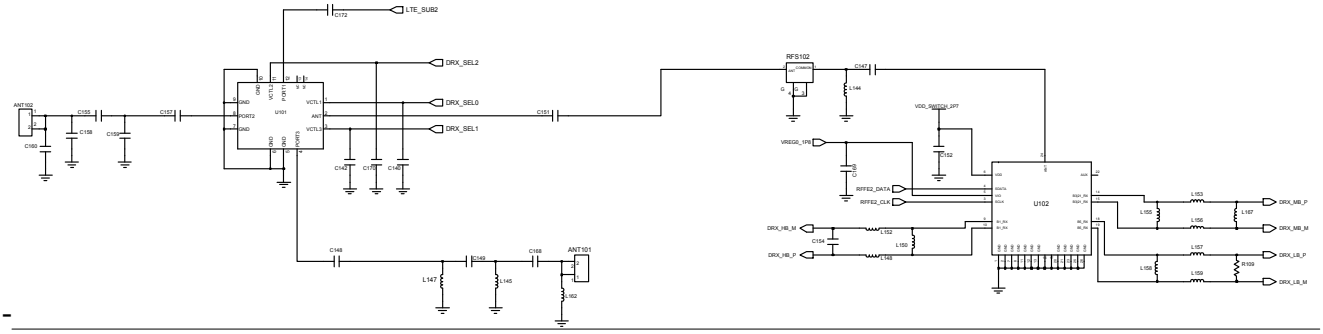

Confidential and proprietary-the contents in this service guide subject to change without prior notice.
Distribution, transmission, or infringement of any content or data from this document without Samsung's written authorization is strictly prohibited.

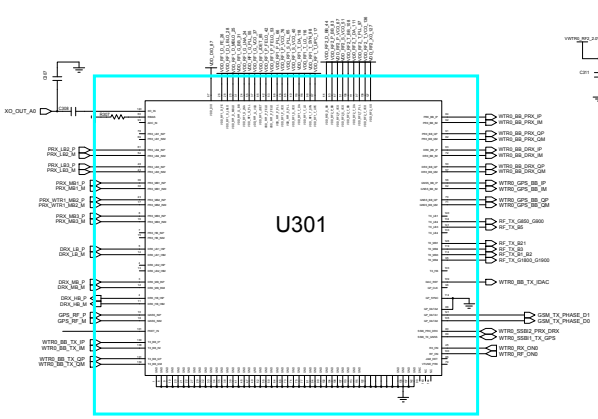

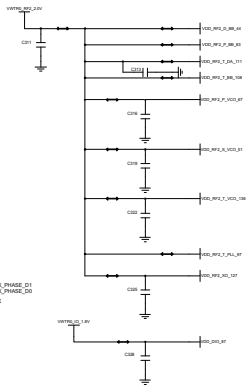

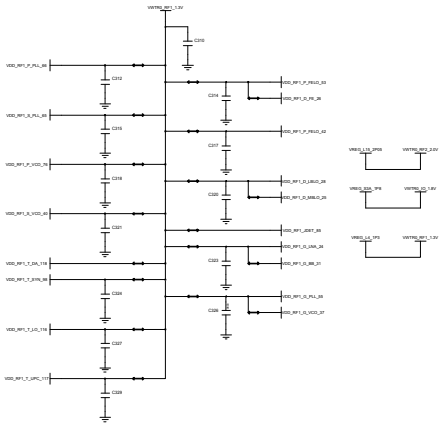

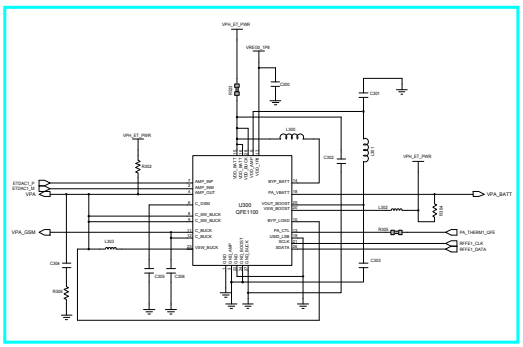

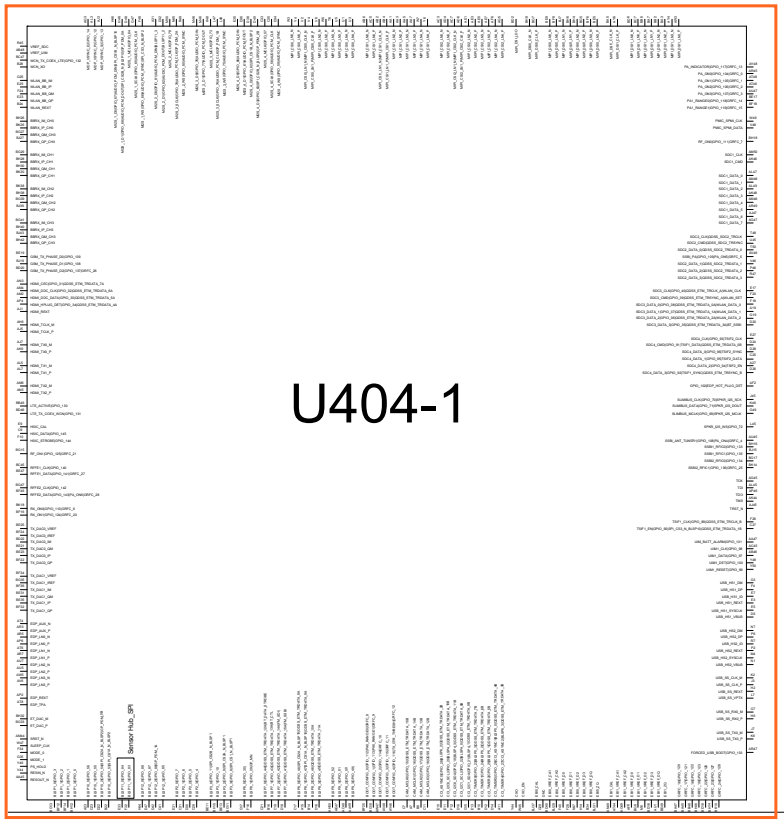

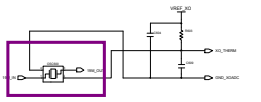

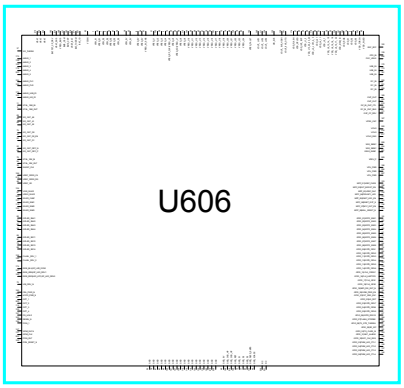

Confidential and proprietary-the contents in this service guide subject to change without prior notice.
Distribution, transmission, or infringement of any content or data from this document without Samsung's written authorization is strictly prohibited.

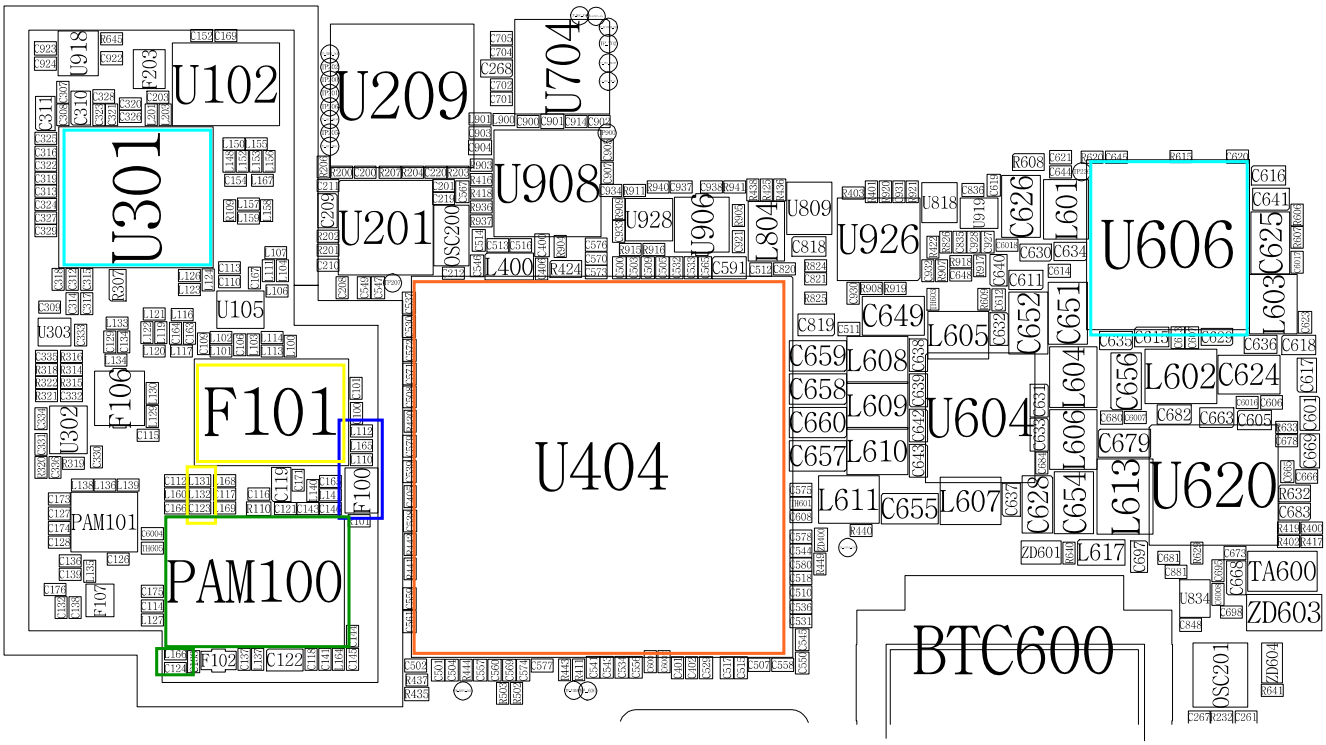

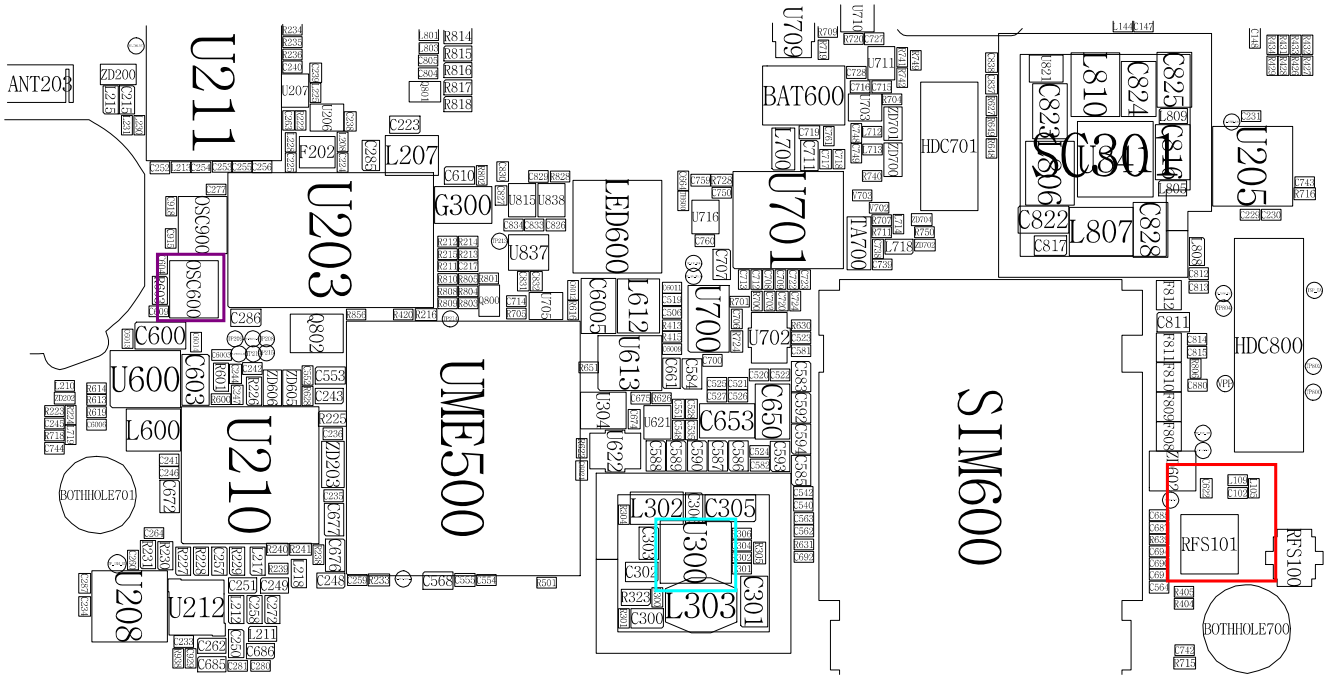

Confidential and proprietary-the contents in this service guide subject to change without prior notice.
Distribution, transmission, or infringement of any content or data from this document without Samsung's written authorization is strictly prohibited.

8-3-32.LTE Band21 发射器

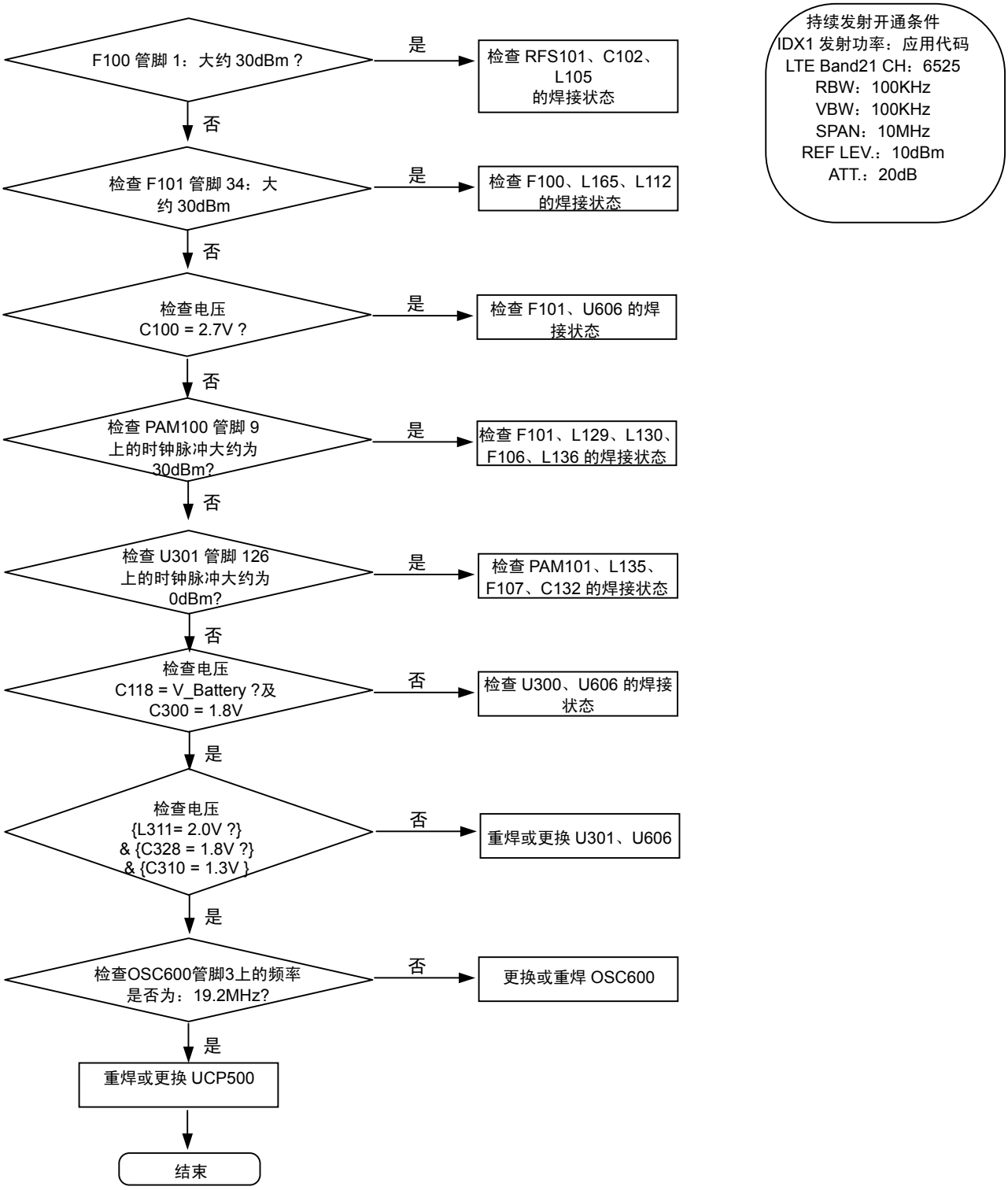

保密和所有权-本维修手册内容的变更恕不另行通知。
未经三星书面授权而发布，传送，或违背本文件中的任何内容或数据是严格禁止的。

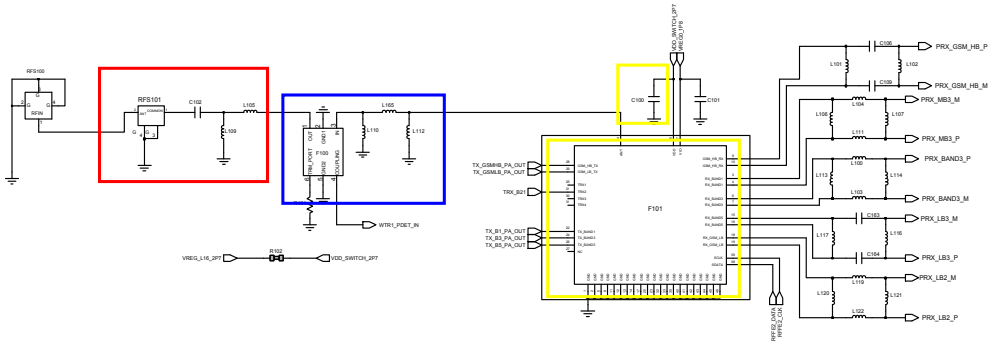

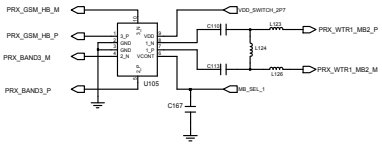

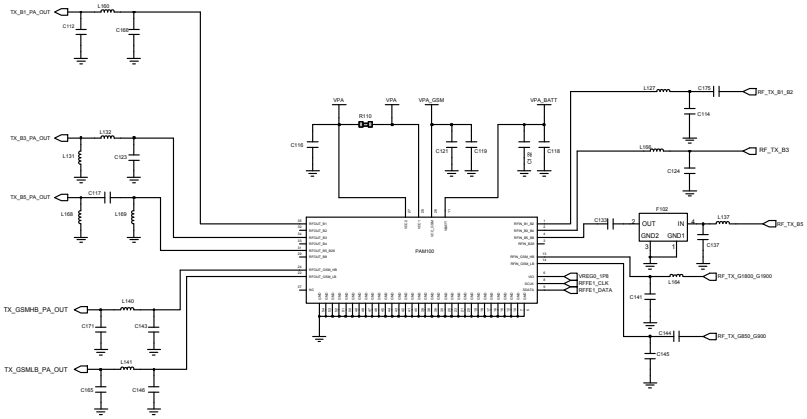

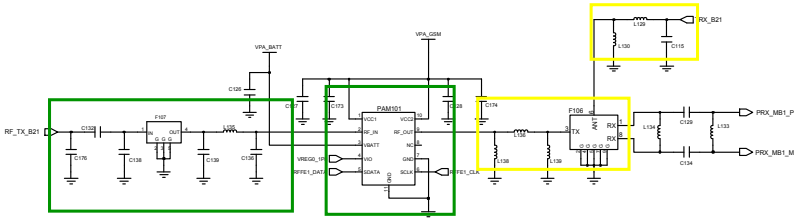

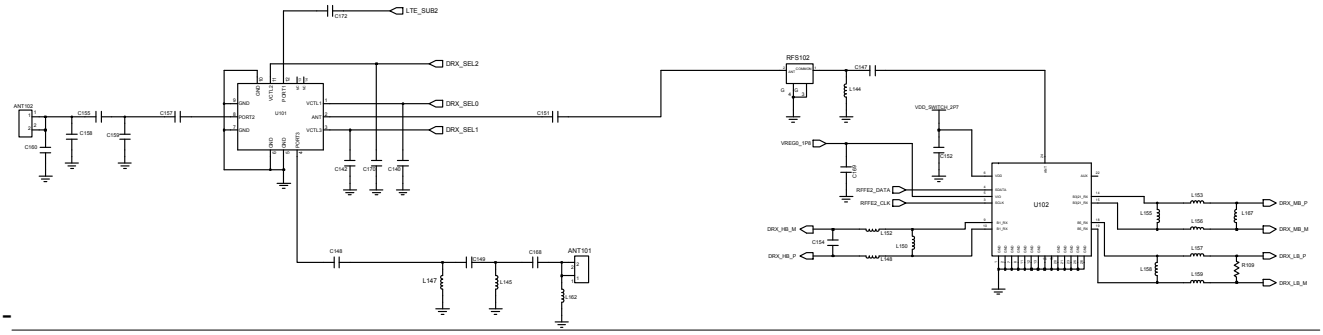

Confidential and proprietary-the contents in this service guide subject to change without prior notice.
Distribution, transmission, or infringement of any content or data from this document without Samsung's written authorization is strictly prohibited.

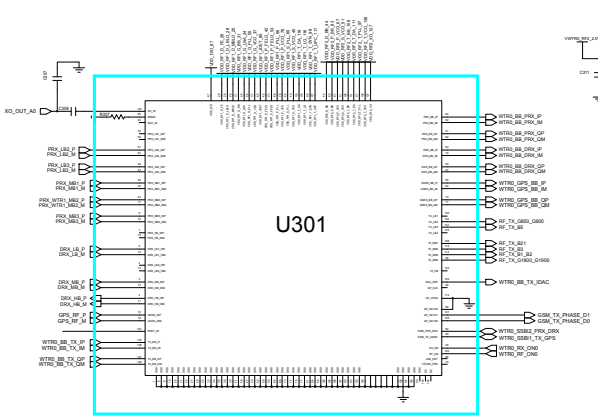

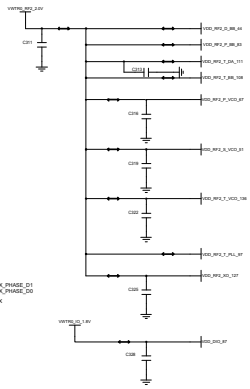

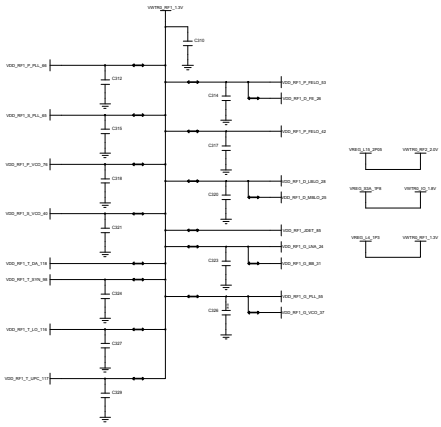

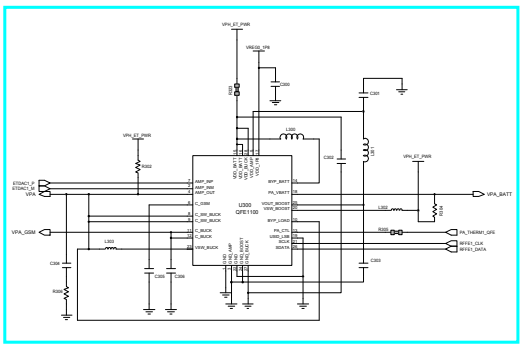

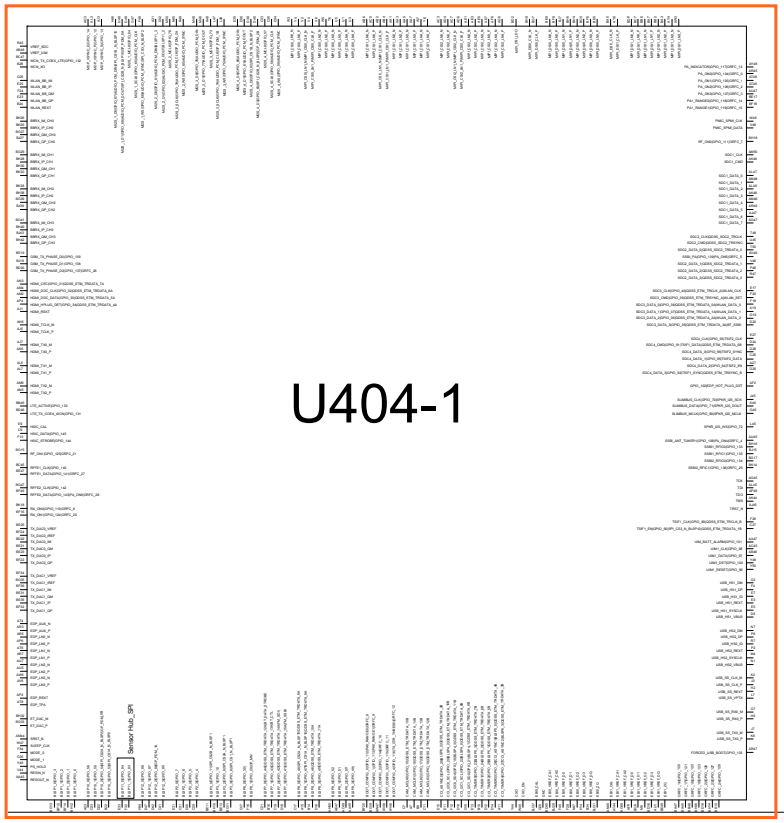

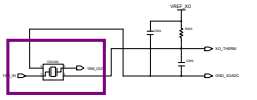

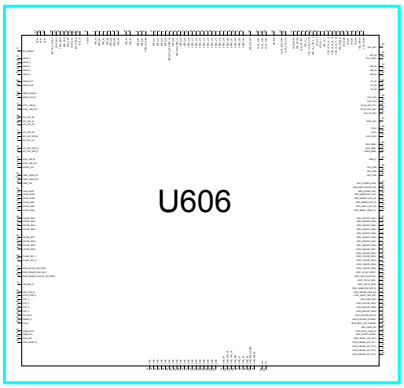

Confidential and proprietary-the contents in this service guide subject to change without prior notice.
Distribution, transmission, or infringement of any content or data from this document without Samsung's written authorization is strictly prohibited.

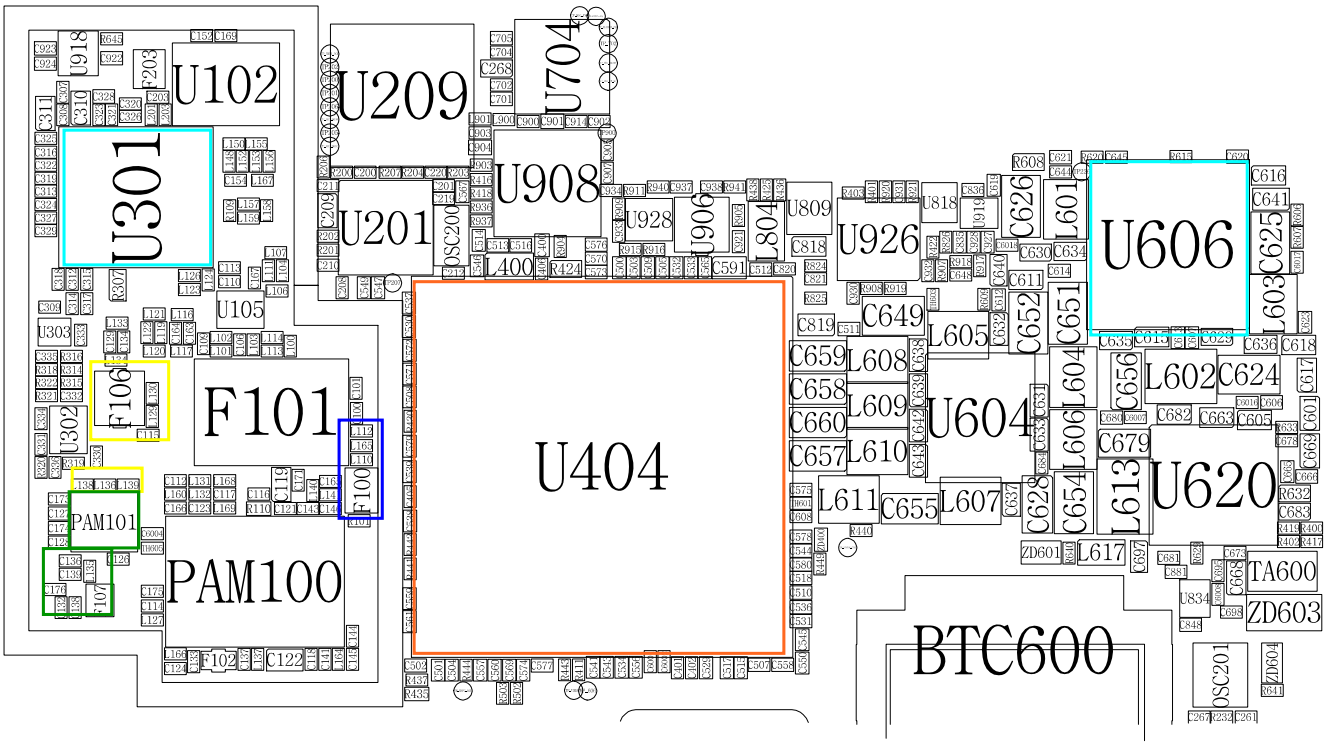

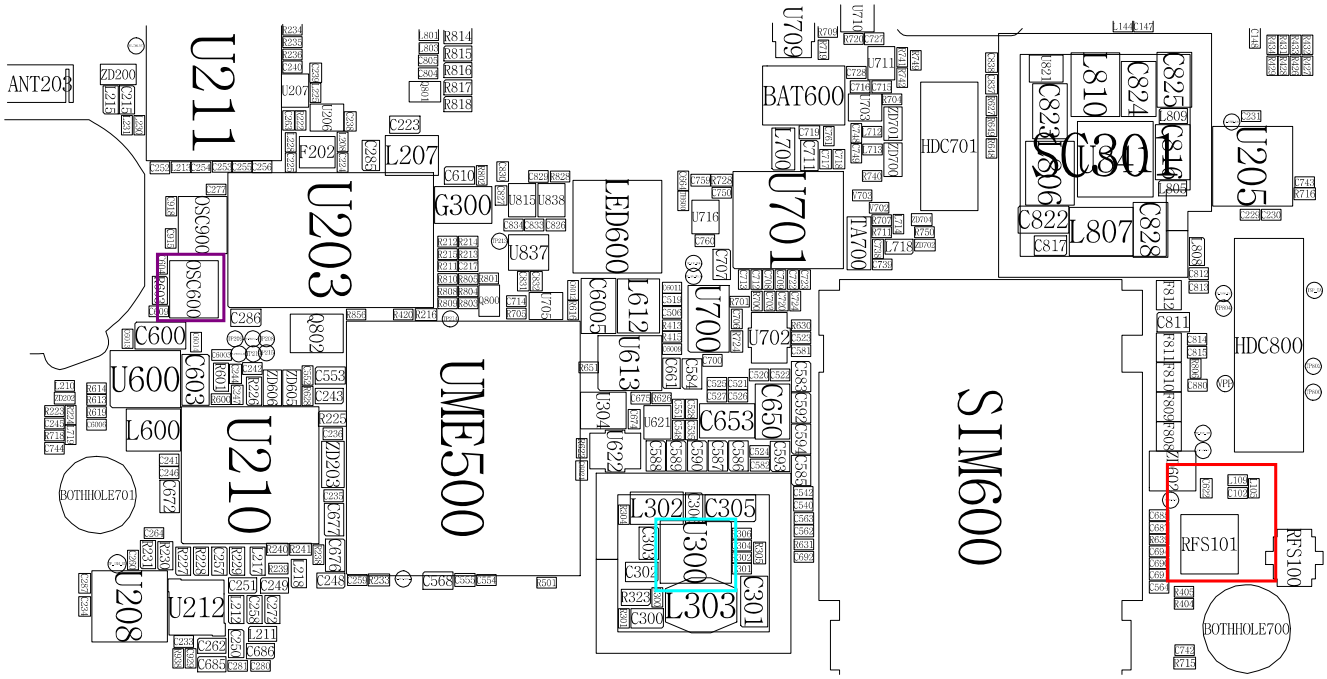

Confidential and proprietary-the contents in this service guide subject to change without prior notice.
Distribution, transmission, or infringement of any content or data from this document without Samsung's written authorization is strictly prohibited.

8-4.维修原理图

-故障处（顶部视图）

●:NC

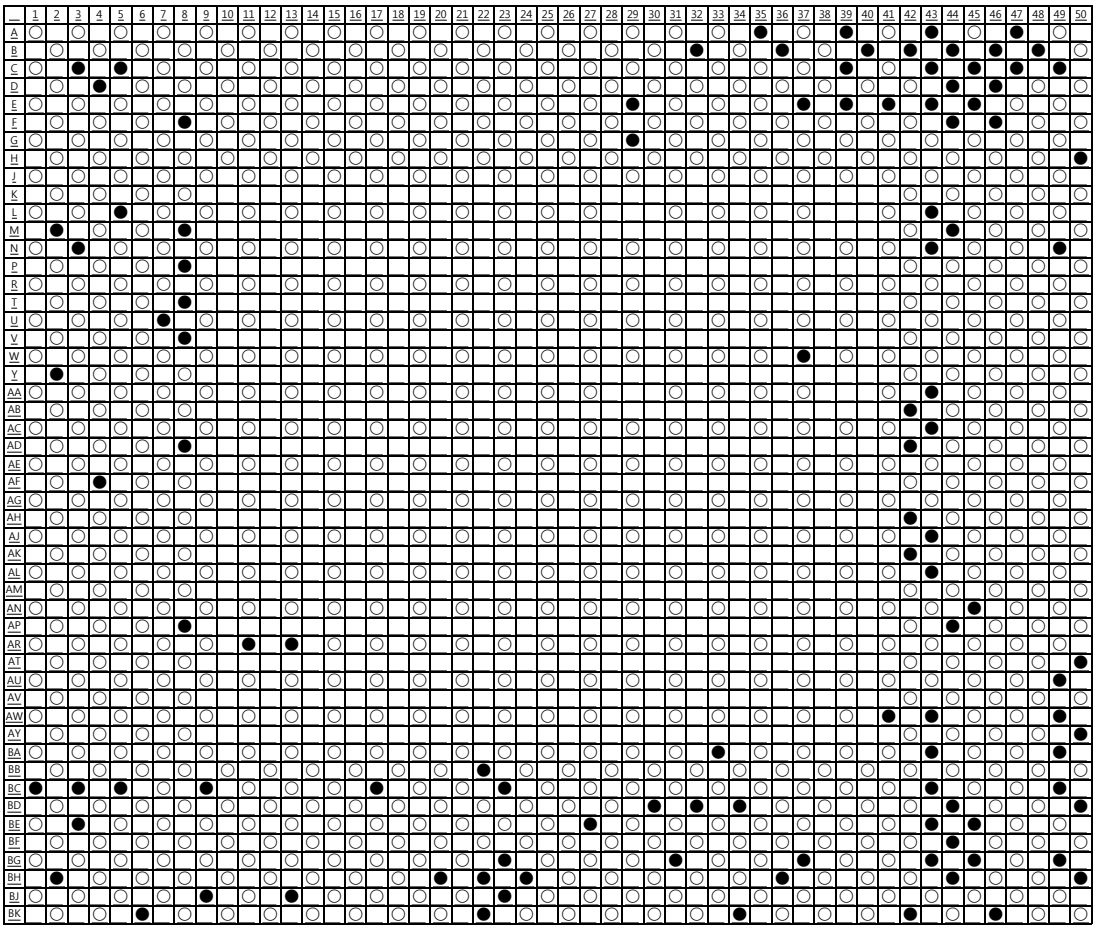

UCP404

保密和所有权-本维修手册内容的变更恕不另行通知。
未经三星书面授权而发布，传送，或违背本文件中的任何内容或数据是严格禁止的。